Electromagnetic Modeling of Cavities and Power Couplers for SC-High-Current Proton Linacs

Two examples for the use of modern electromagnetic simulation tools for the advanced design of accelerator components

Frank L. Krawczyk

LANL, LANSCE-1, MS H817, Los Alamos, NM 87545, USA

APS Meeting in Columbus, Ohio, April 1998

Introduction

- Several proposals for high-current proton accelerator applications (e.g. APT, ATW, EA, NSNS, ...)
- Especially machines using cw beams can benefit from the use of superconducting rf cavities
- High power levels demand careful design of all rf components, like cavites and power couplers
- Modeling requires state-of-the-art software for 2D and 3D aspects of the proposed structures
- Application of electromagnetic simulation software to achieve detailed knowledge on structures before their construction

LANSCE
Los Alamos Neutron Science Center
Los Alamos
NATIONAL LABORATORY

Accelerator/Component Requirements

- Superconducting accelerator up to 1700 MeV
- 100 mA, cw proton beam requires up to 420 kW cw-power into 5-cell cavities @ 700 MHz
- Approach: 2 couplers/cavity @ 210 kW traveling wave
- High reliability at acceptable cost
- Low thermal leak at cryogenic temperatures
- Coupler design based on experience database of existing accelerators and recent experiments to further develop this technology

LANSCE
Los Alamos Neutron Science Center
Los Alamos
NATIONAL LABORATORY

The Cavity Simulations

- For the most part 2D simulations (3D with coupler)
- Require parameter studies to optimize cavity shapes
- Requires extensive postprocessing to derive secondary quantities from fields and frequency

$\Downarrow$

Modeling Software needs:

- Rf and beam interaction simulation/evaluation
- Optimizer or symbolic geometry description
- Extensive suite of postprocessing tools or free programming environment with access to calculation data

LANSCE
Los Alamos Neutron Science Center
Los Alamos
NATIONAL LABORATORY

Model of One of the Proposed Cavities

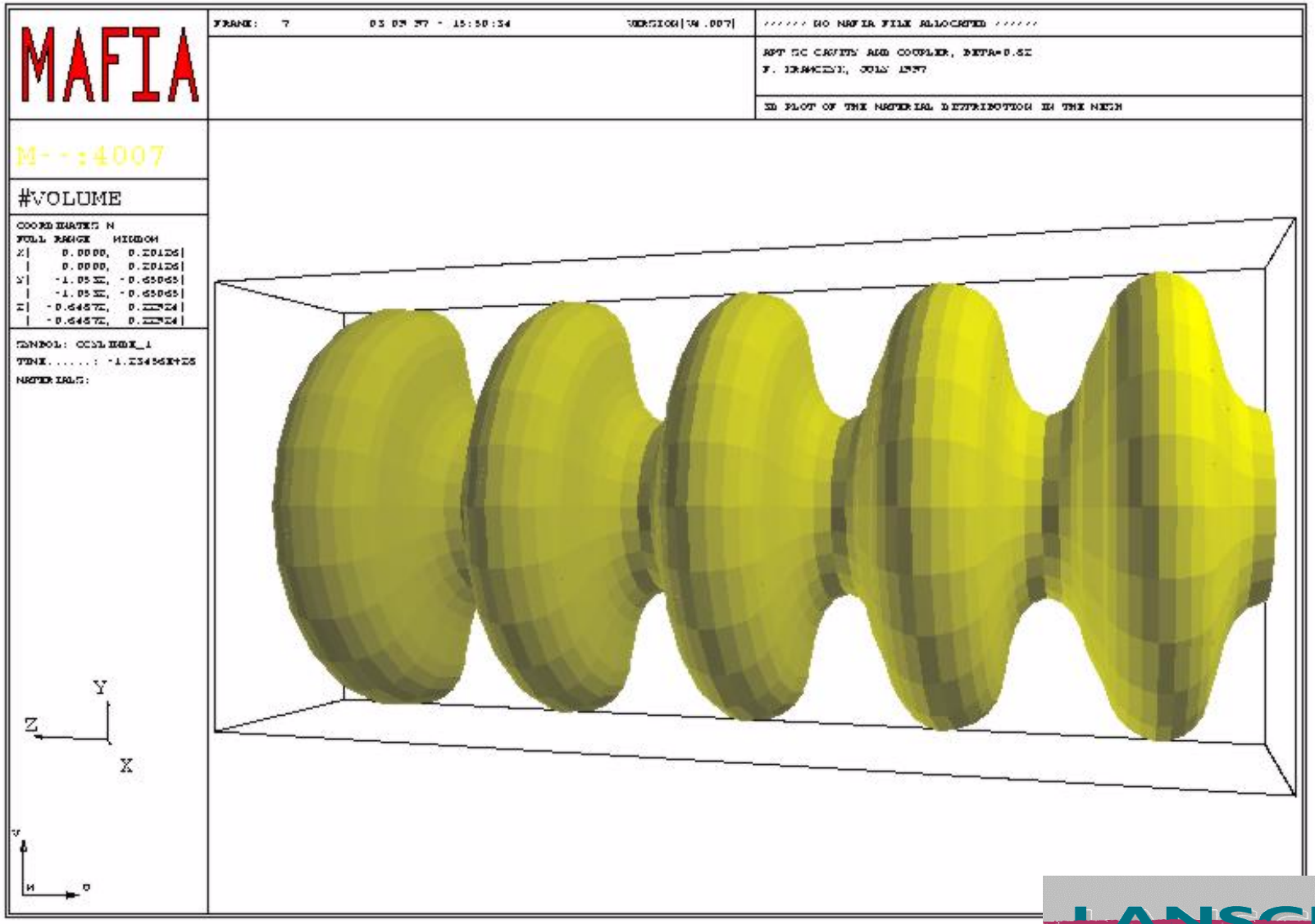

LANSCE
Los Alamos Neutron Science Center
Los Alamos
NATIONAL LABORATORY

Single Cell Test Cavity

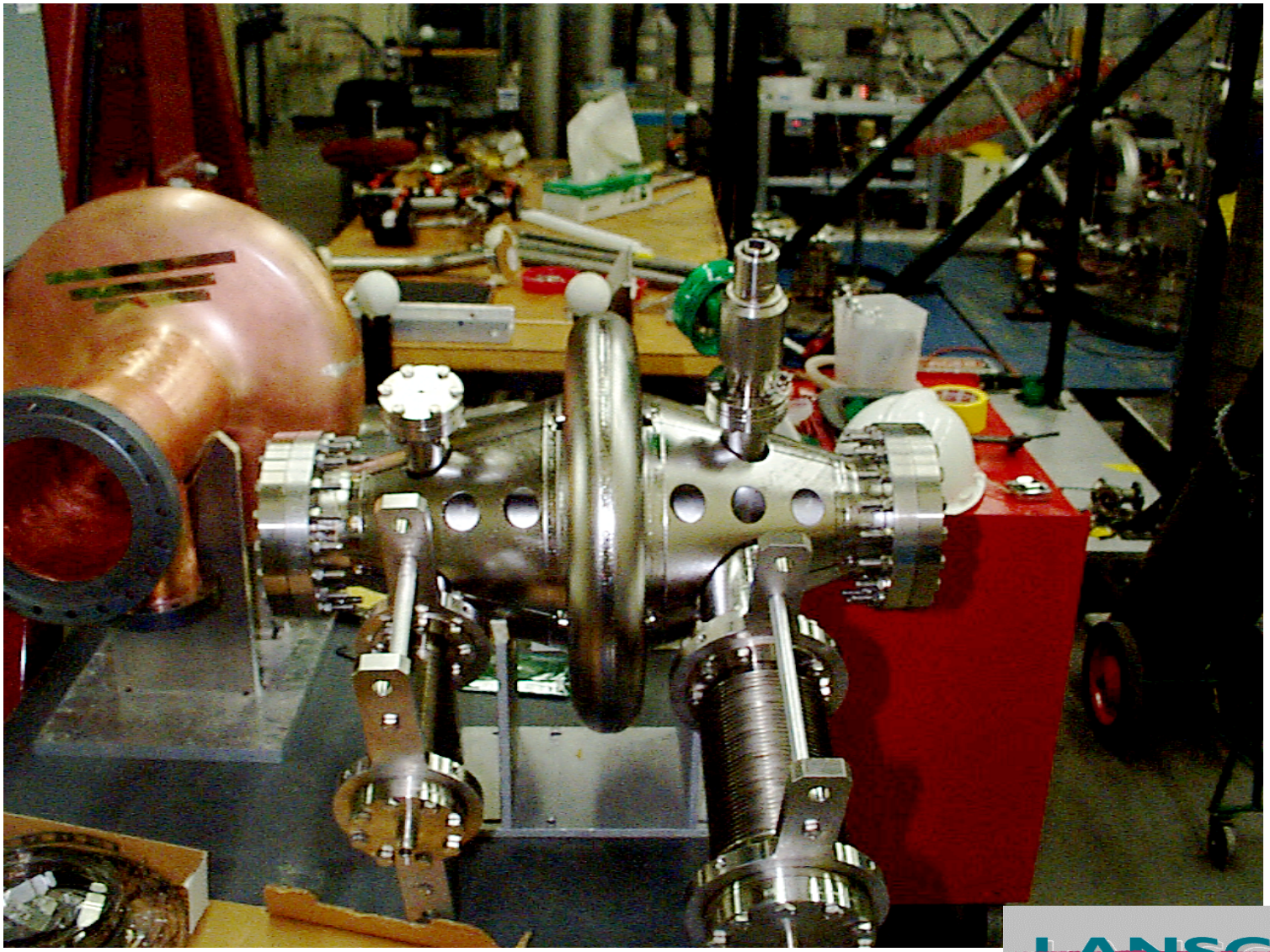

LANSCE
Los Alamos Neutron Science Center
Los Alamos
NATIONAL LABORATORY

The Cavity Shape

- **"Elliptical" shape described by:**
  - **elliptically shaped noses (aspect ratio 2:1)**
  - **straight side-walls**
  - **circular dome**
- **Structures only for 2 β: 0.64 and 0.82 (large velocity acceptance)**
- **For each β two types of cells have been designed: mid- and end-cells. The latter have to compensate for the field penetration into the beam pipe.**
- **The cavities have been optimized for rf performance (π-mode), mechanical, fabrication, cleaning considerations.**

LANSCE
Los Alamos Neutron Science Center
Los Alamos
NATIONAL LABORATORY

Geometry Description (One Half-Cell)

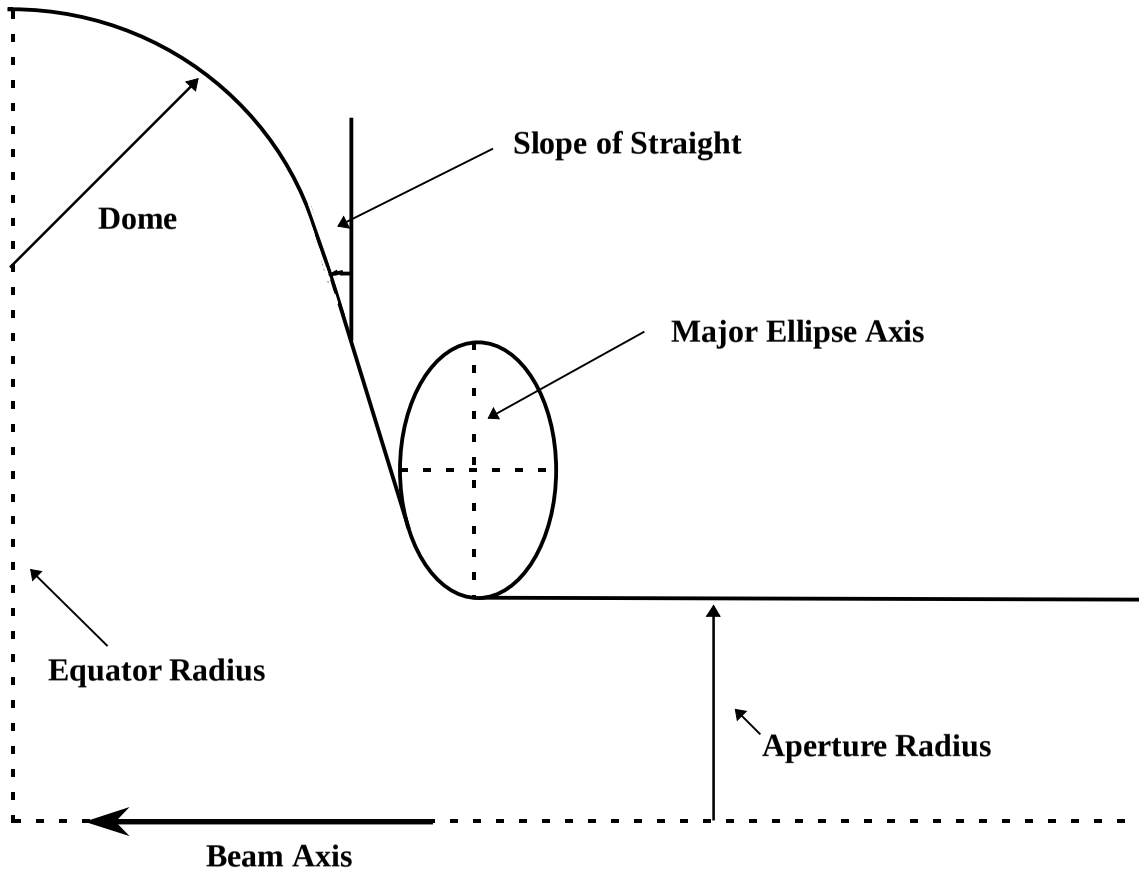

Shape Comparisons

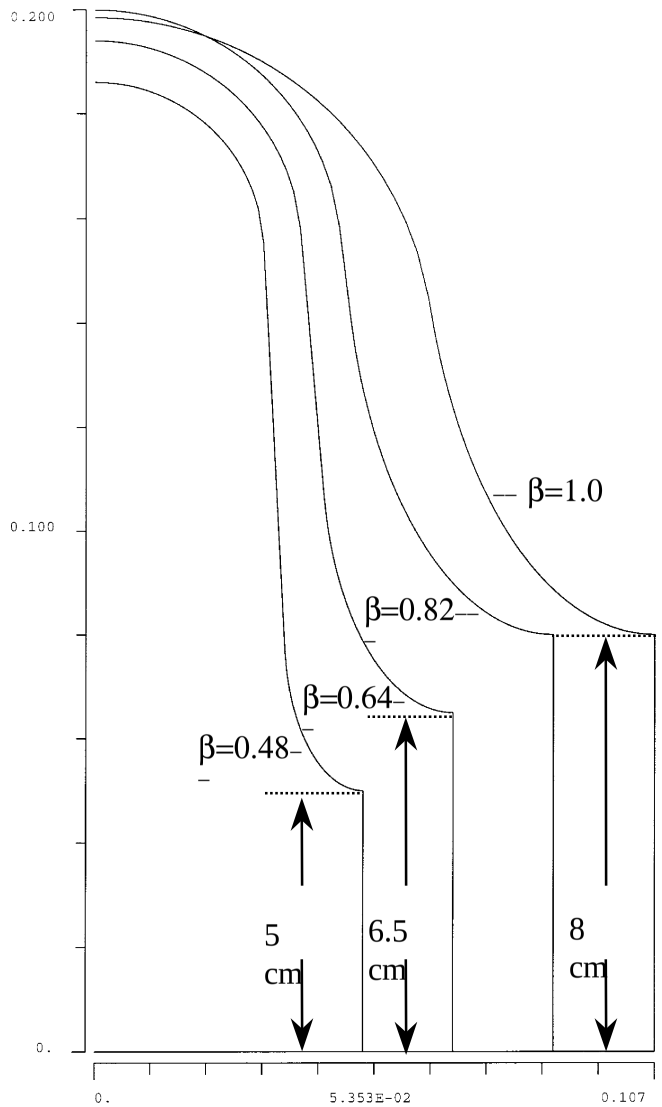

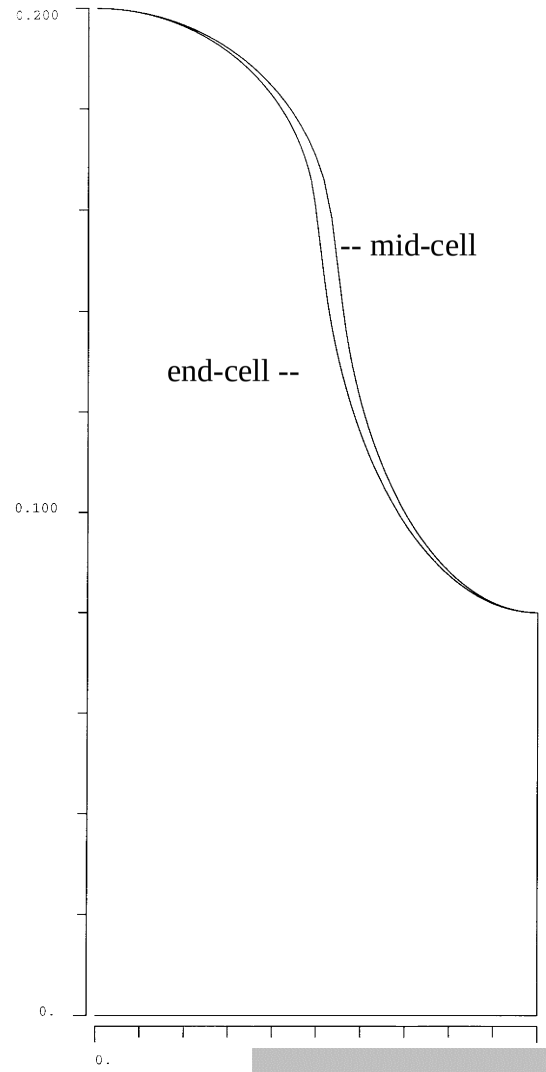

π-mode in 5-cell Cavity

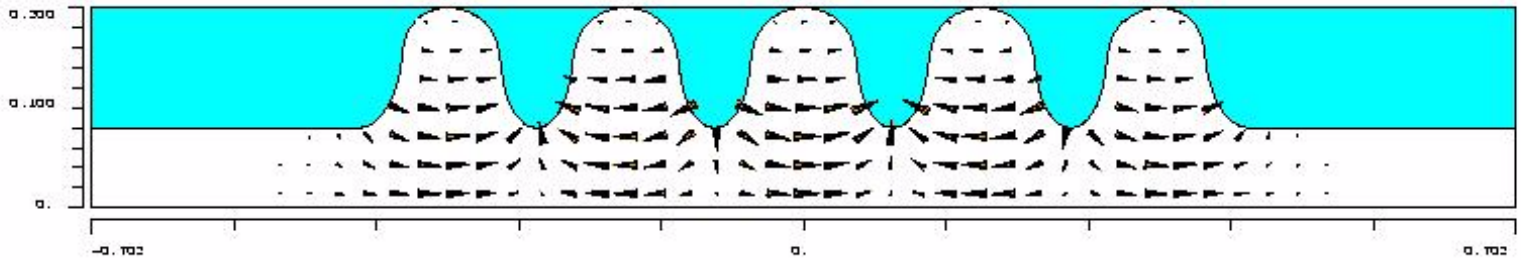

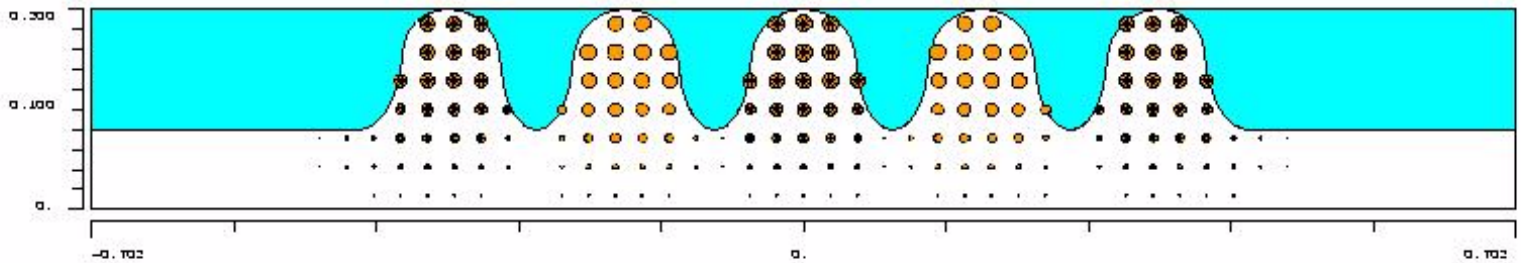

LANSCE
Los Alamos Neutron Science Center
Los Alamos
NATIONAL LABORATORY

The Cavity RF-Data

β	0.64	0.82
Q_0 [in 10^{10}]	0.951	1.25
Geometry Factor	151	198
Transittime Factor T	0.673	0.681
β for maximal T	0.695	0.886
ZT^2/Q [Ω/m]	247	297
E_{pk}/E_0T	2.94	2.48
H_{pk}/E_0T [G/MV/m]	73	66
P_{cav} [W]	0.3	0.24

- Secondary quantities calculated from fields and frequency
- P_{cav} is the power dissipated by the accelerating mode at 1 MV/m
- Transittime factors are quoted for a particle with a velocity of β_{design}
- Q_0 assumes an R_s of 15.9 nΩ

LANSCE Los Alamos Neutron Science Center
Los Alamos NATIONAL LABORATORY

The Cavity Transittime Factor

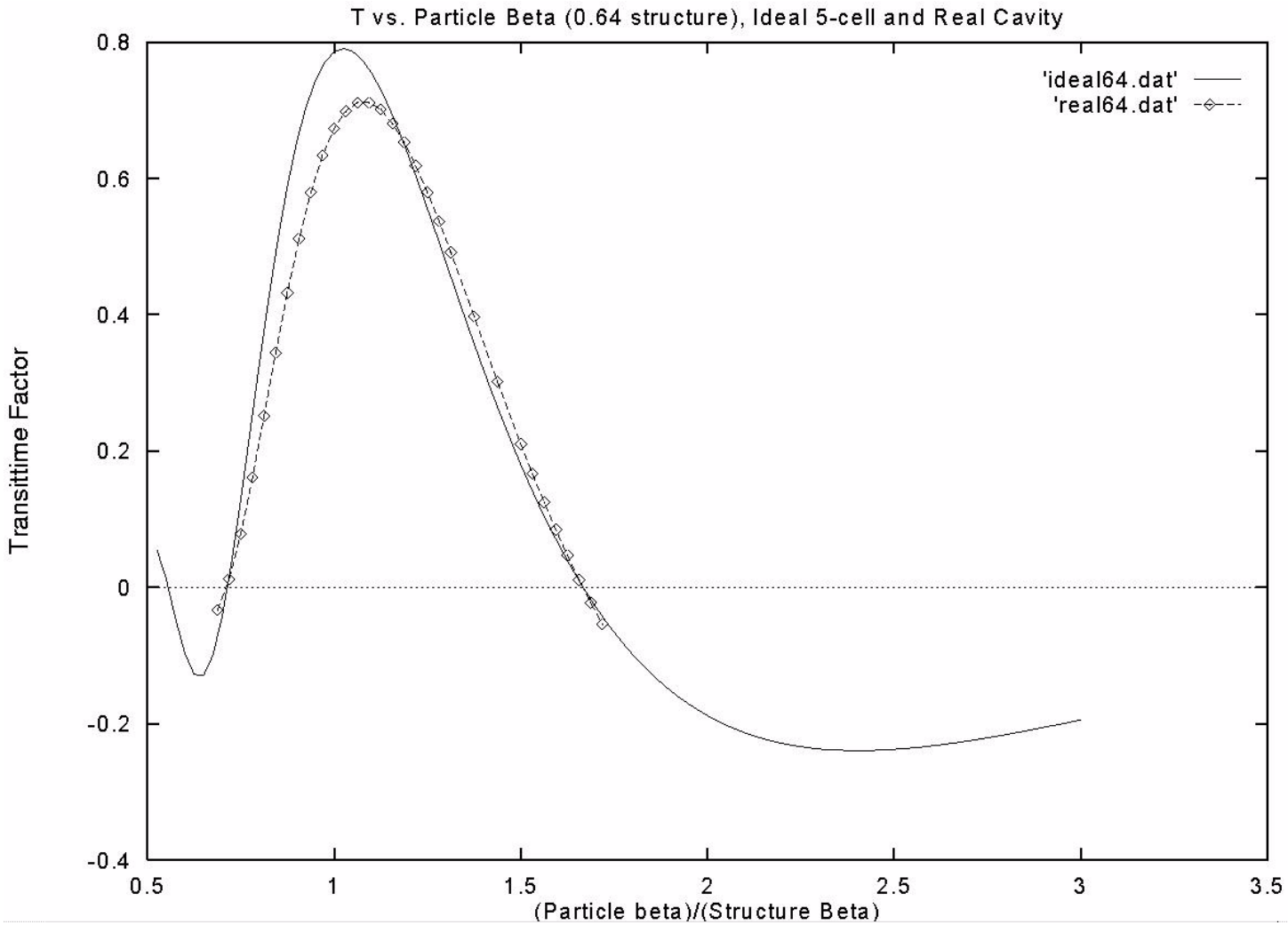

3D Cavity Simulations for Q_{ext}

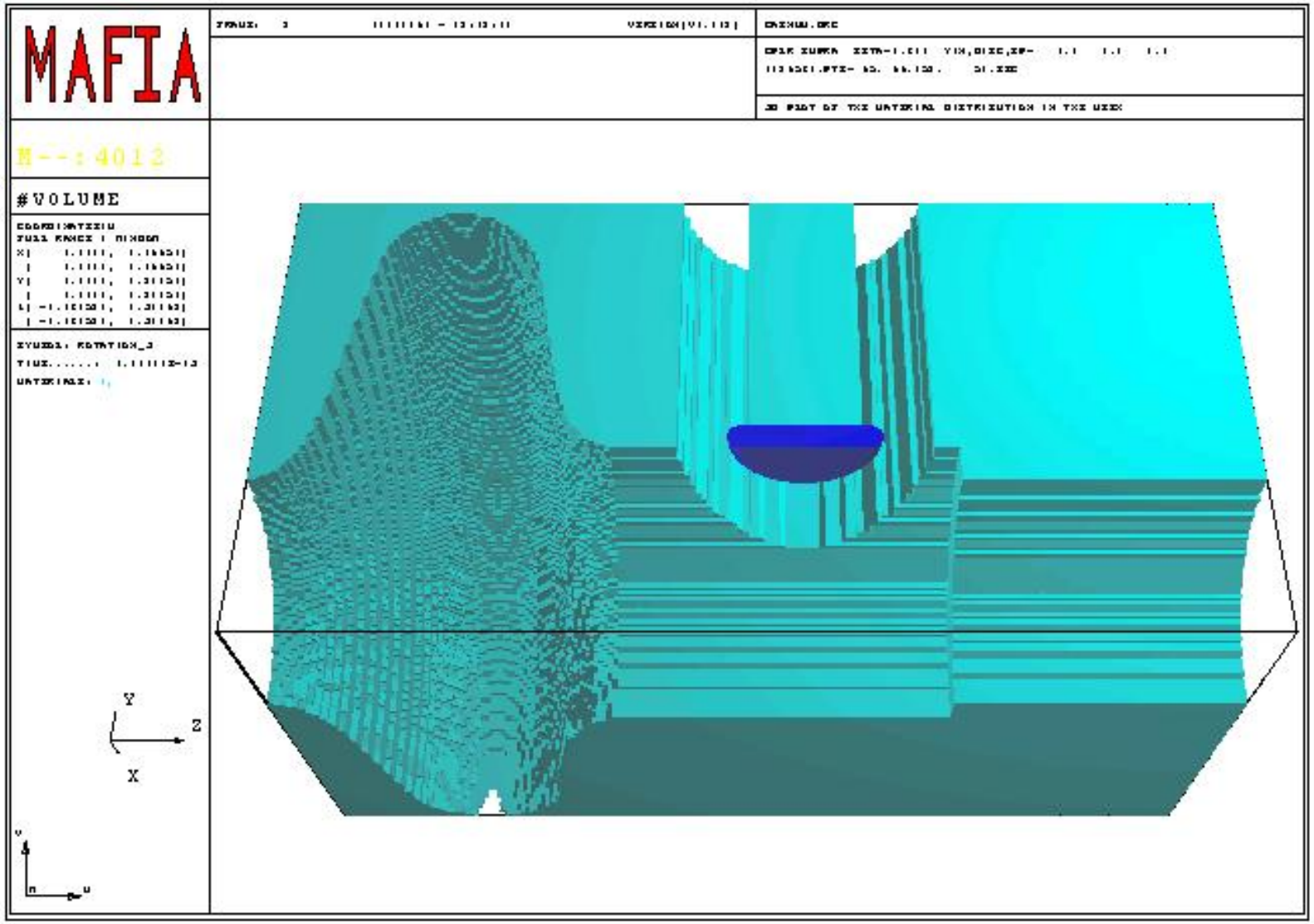

LANSCE
Los Alamos Neutron Science Center
Los Alamos

The Power Coupler Simulations

- Full 3D simulations
- Require parameter studies to optimize coupler performance
- Requires extensive postprocessing to derive secondary quantities from fields
- Requires solution of the explicitly timedependent Maxwell's Equations

$\Downarrow$

Modeling software needs:

- Memory efficient algorithms
- Optimizer or symbolic geometry description
- Extensive suite of postprocessing tools or free programming with access to calculation data
- Also needs tools like: S-parameter calculations, FFT etc.

LANSCE
Los Alamos Neutron Science Center
Los Alamos
NATIONAL LABORATORY

Coaxial Coupler Layout

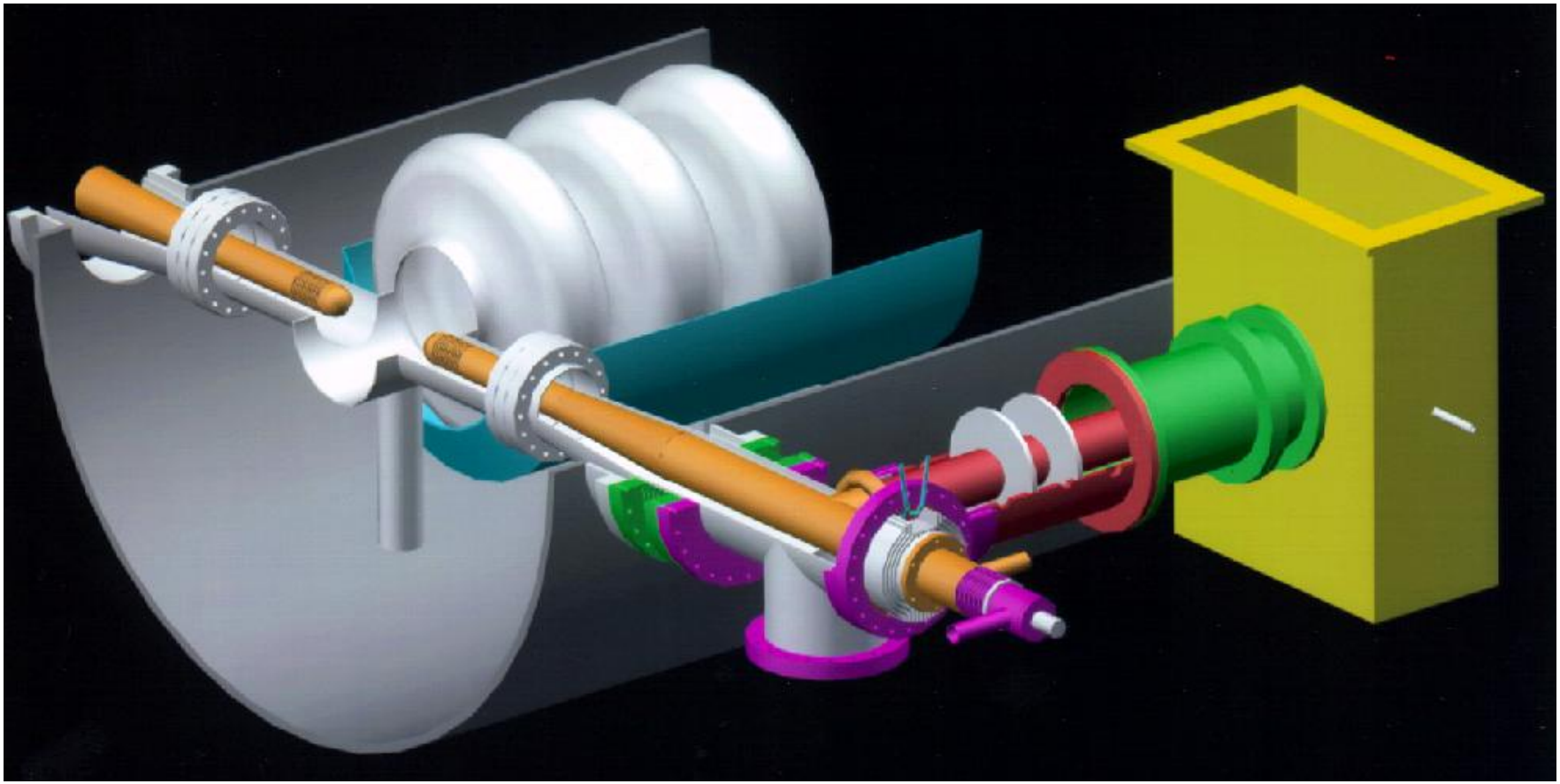

Power Coupler Simulation Model

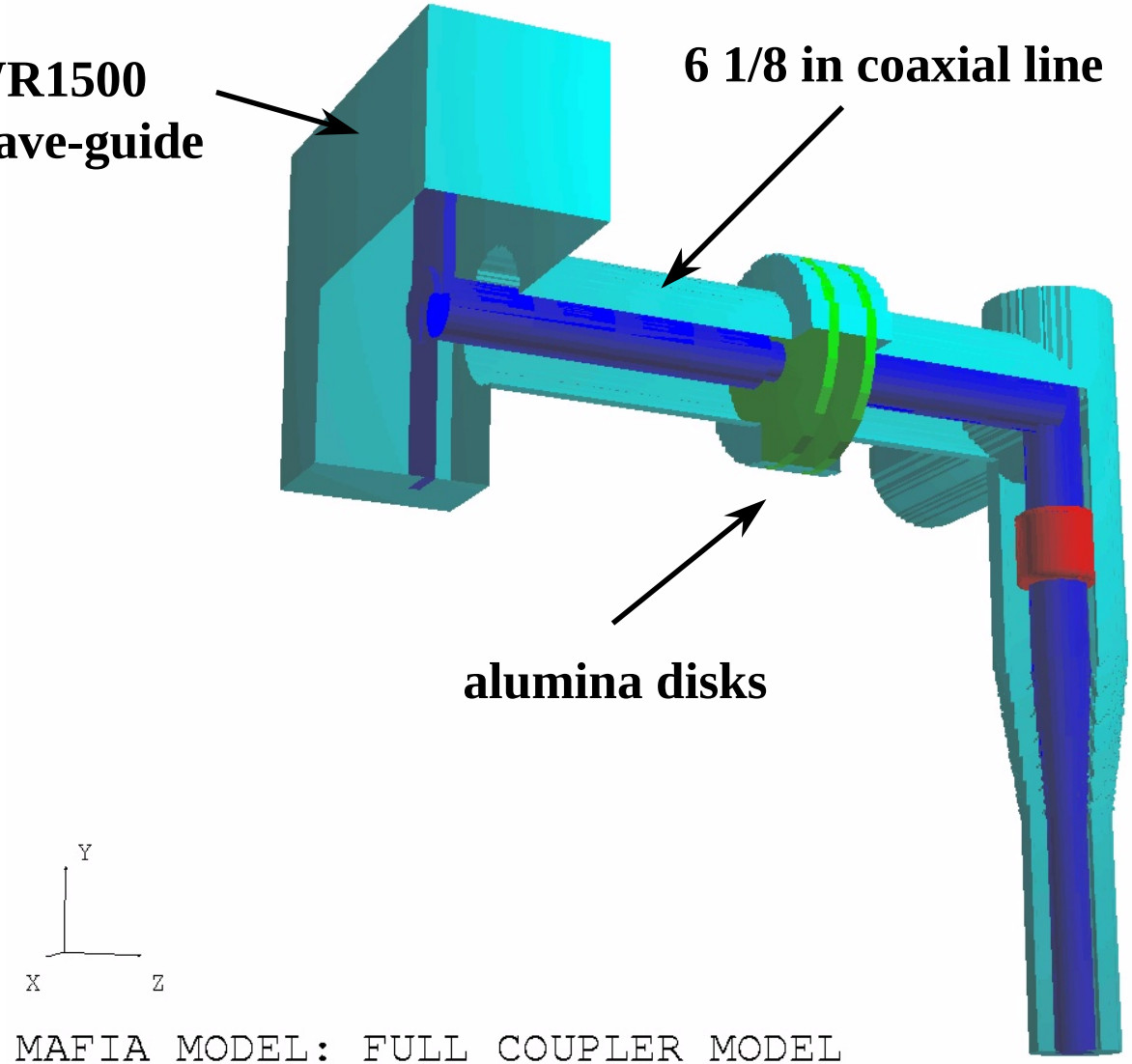

MAFIA MODEL: FULL COUPLER MODEL

Rectangular Waveguide-Coax Transition

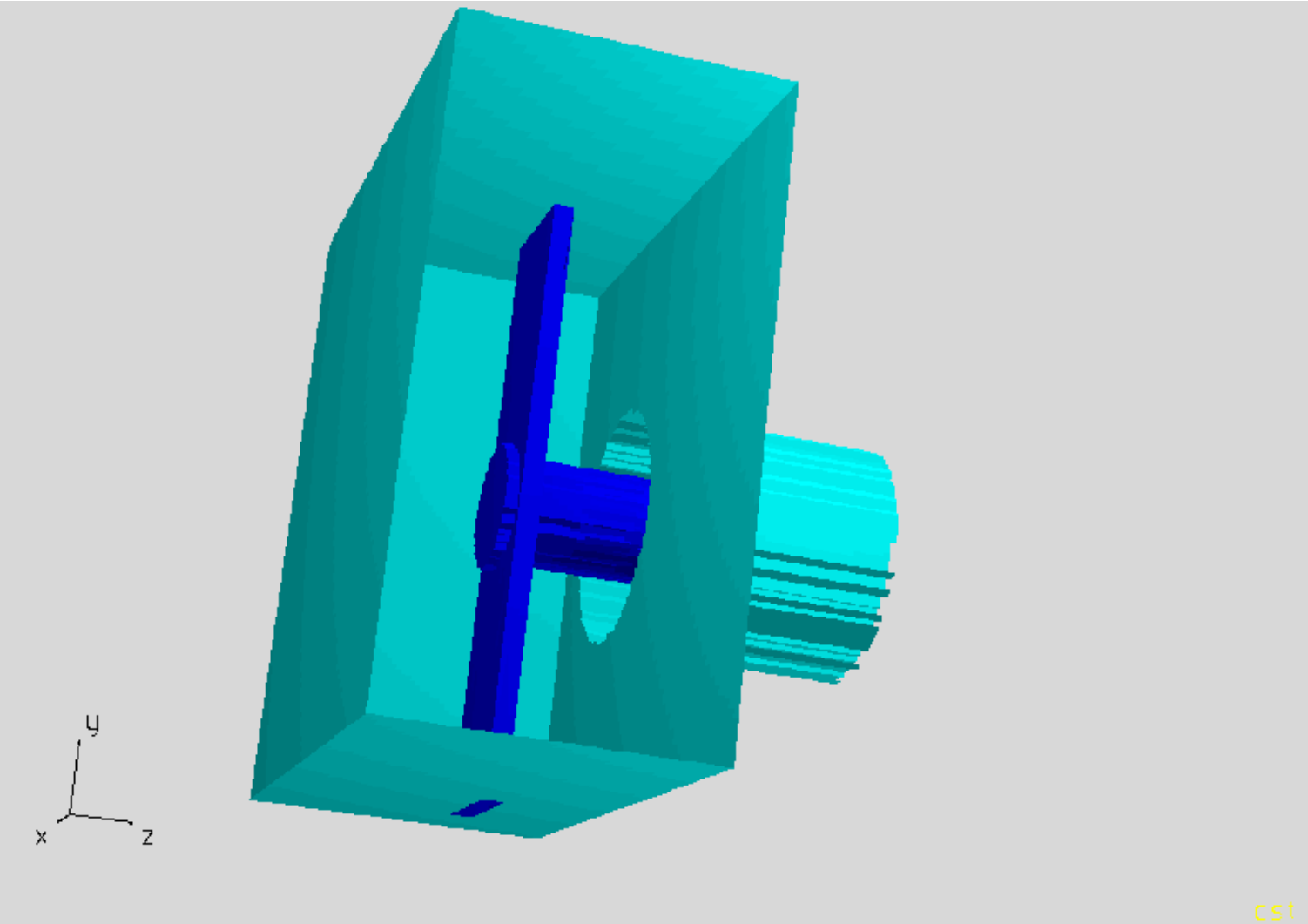

Double Window Concept

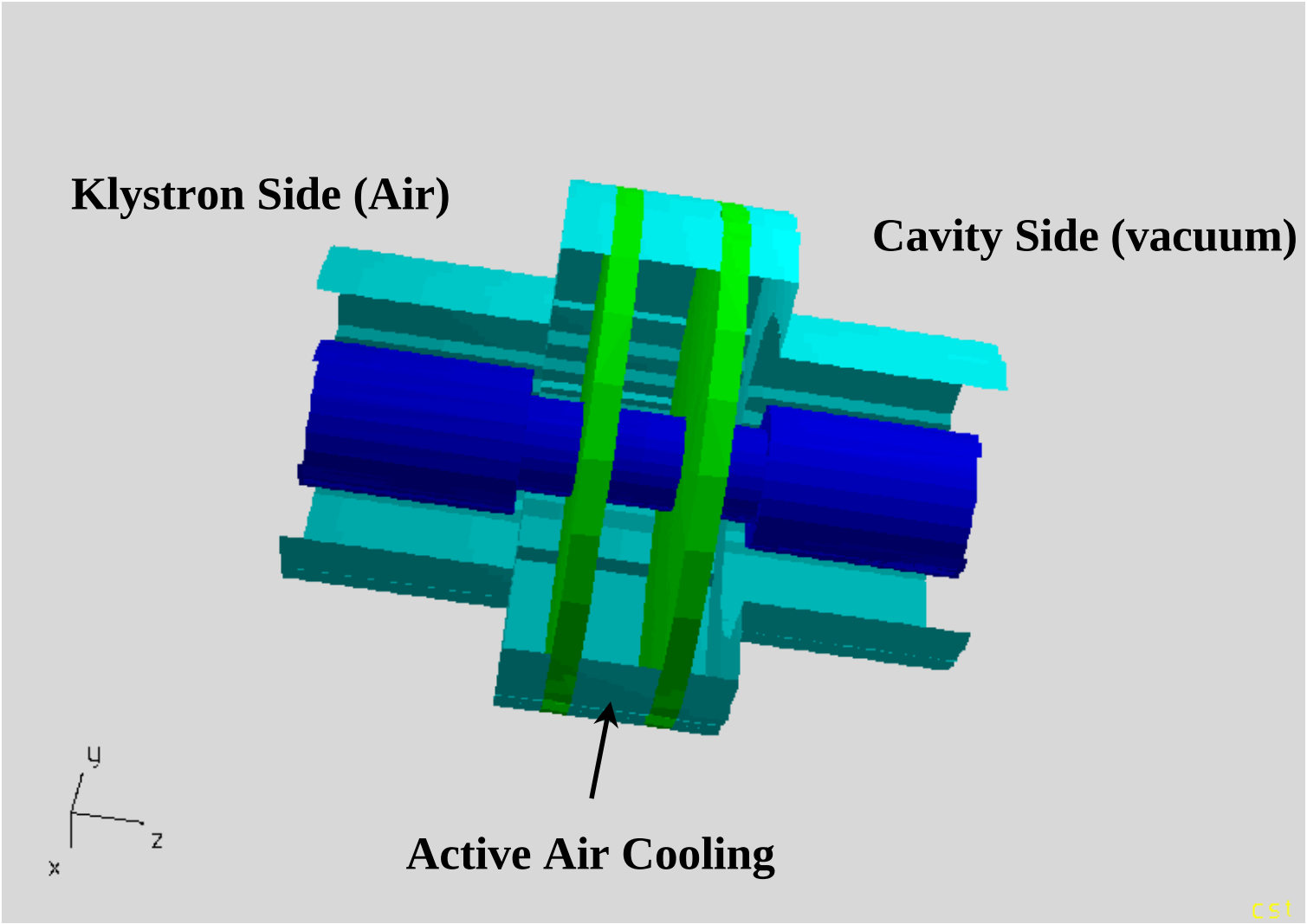

Model of Quarterwave Stub

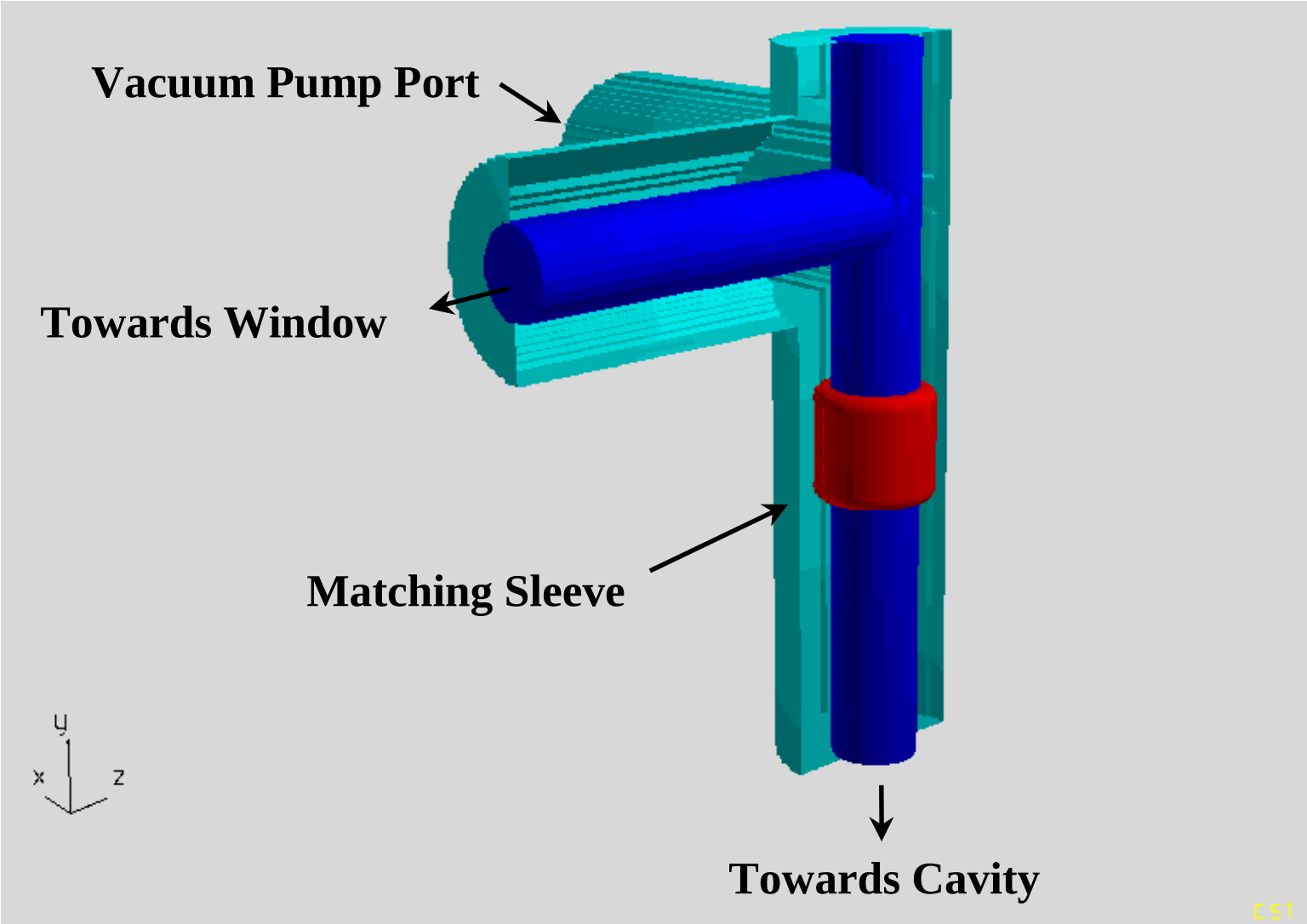

S21/S11 for Optimized Stub/Sleeve

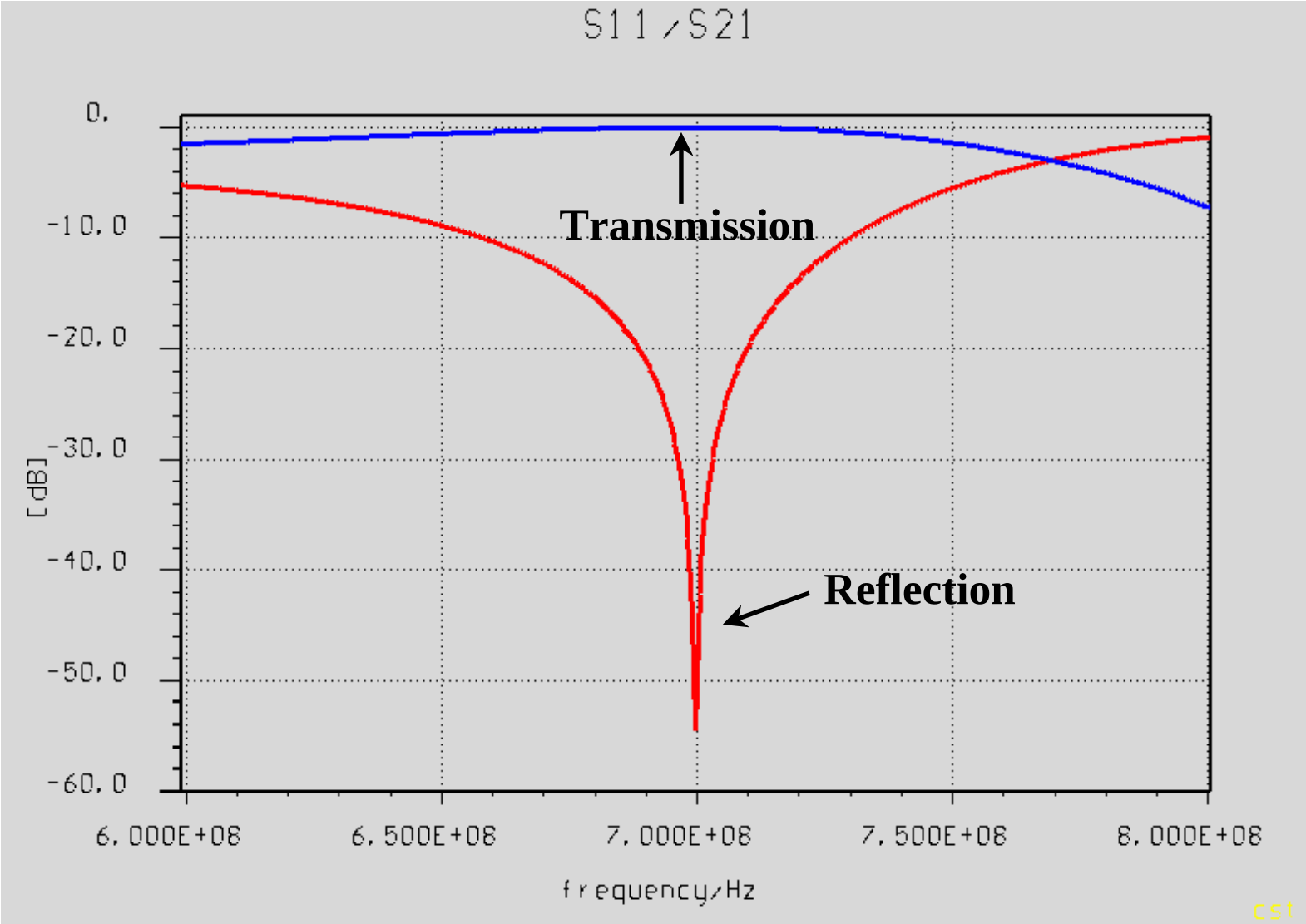

HFSS Model of Coupler Geometry

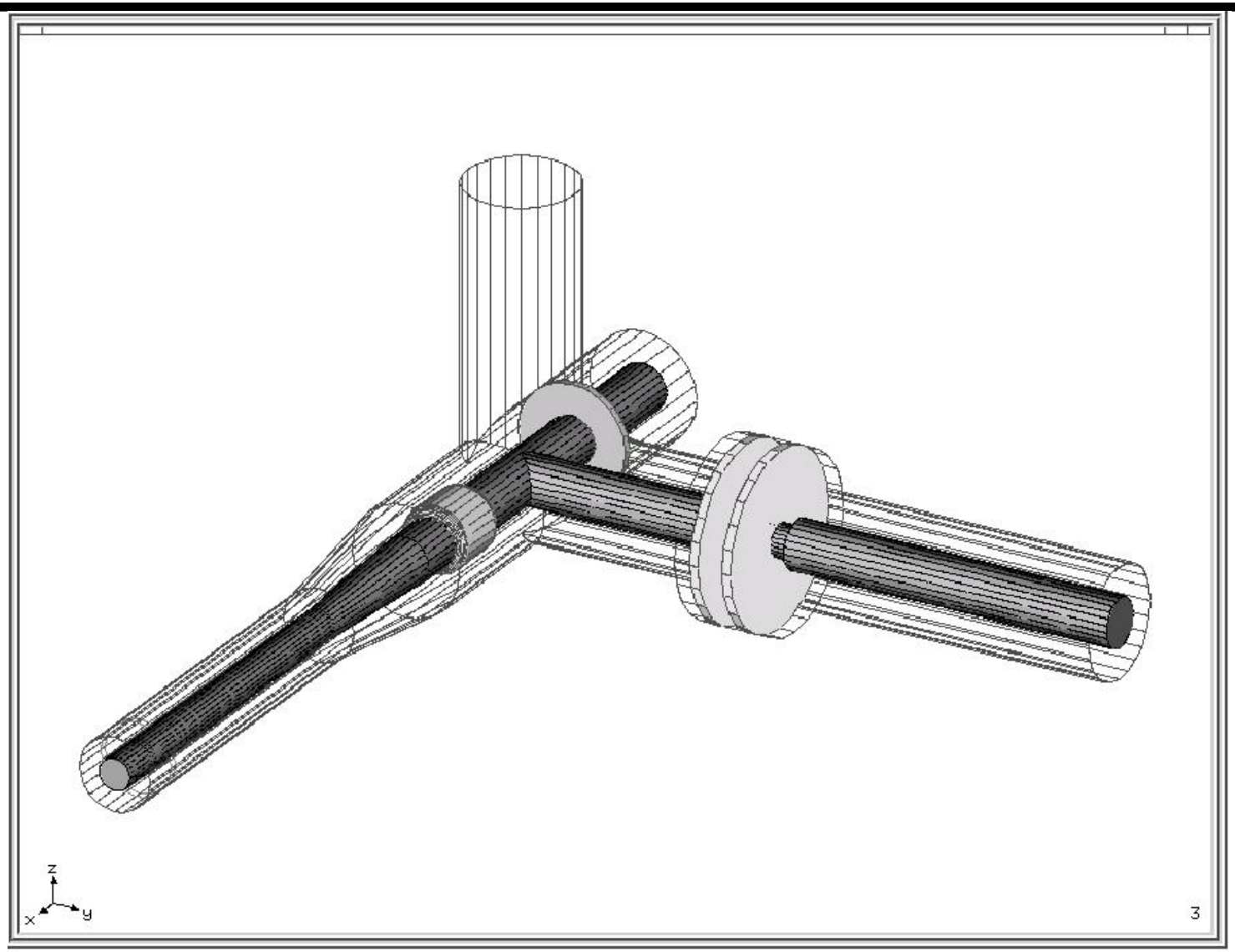

LANSCE
Los Alamos Neutron Science Center
Los Alamos
NATIONAL LABORATORY

HFSS Model of Matching Sleeve

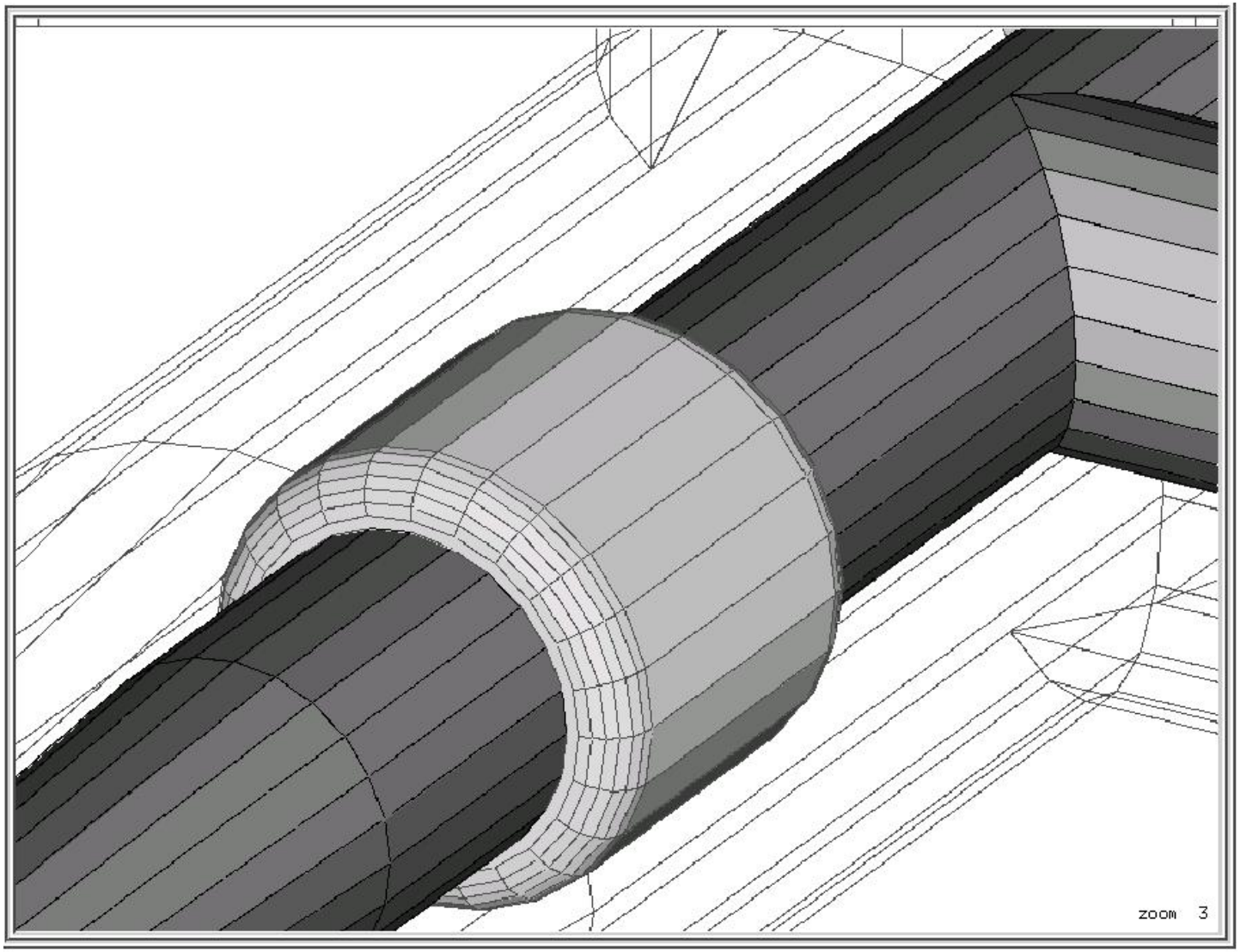

S21/S11 - HFSS Result

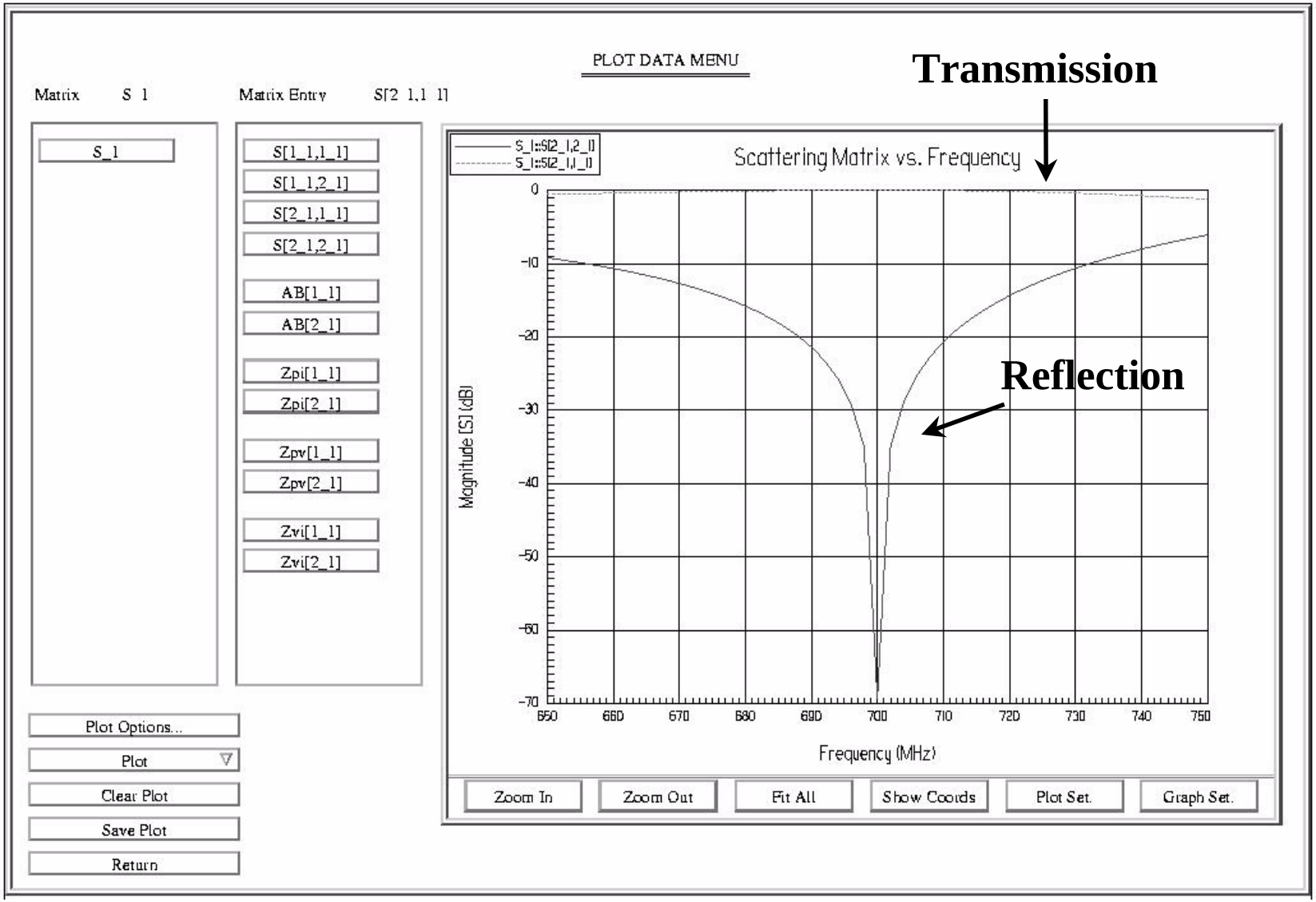

LANSCE
Los Alamos Neutron Science Center
Los Alamos
NATIONAL LABORATORY

Smith Chart - HFSS Result

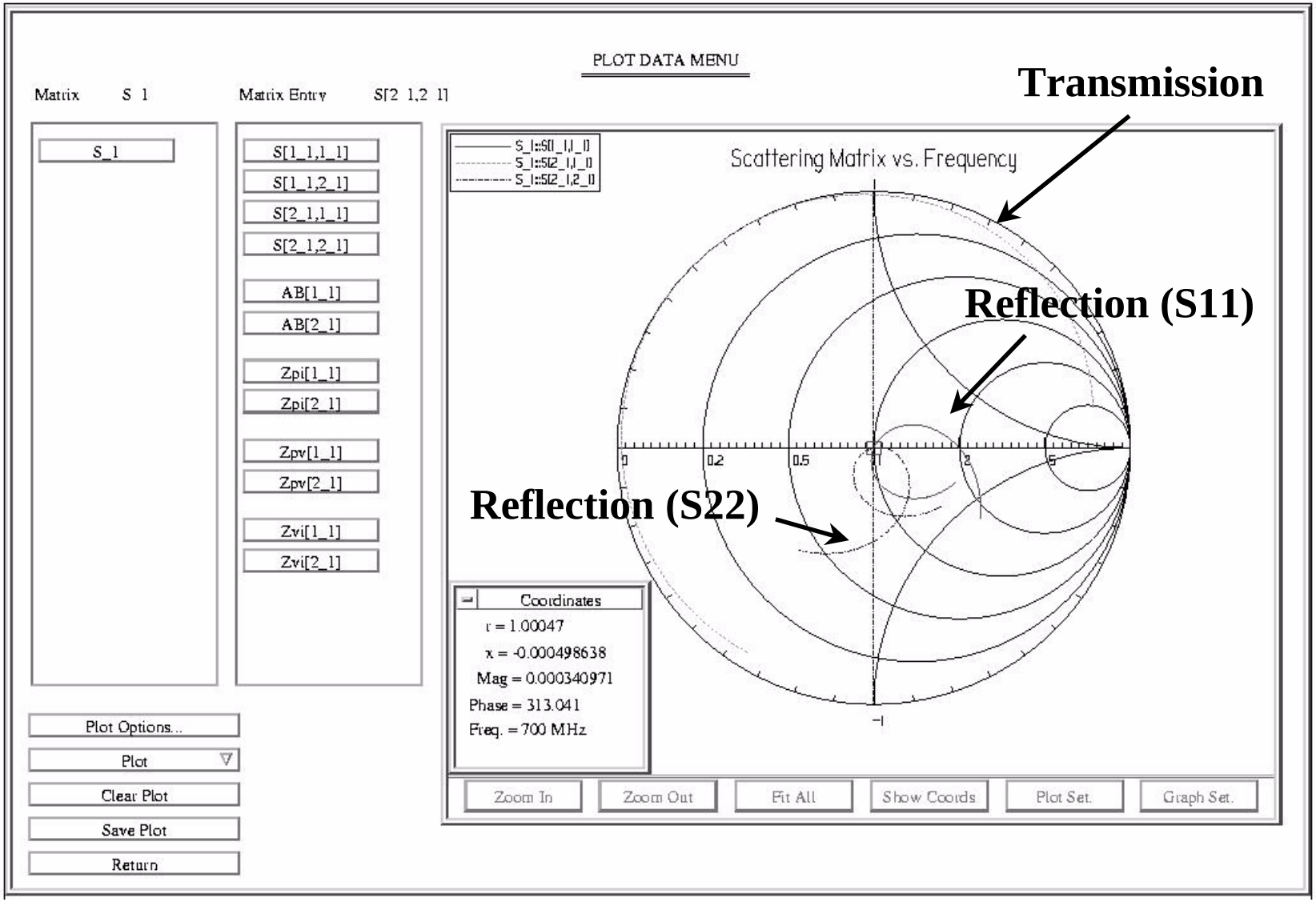

LANSCE
Los Alamos Neutron Science Center
Los Alamos

Tuning Sensitivities

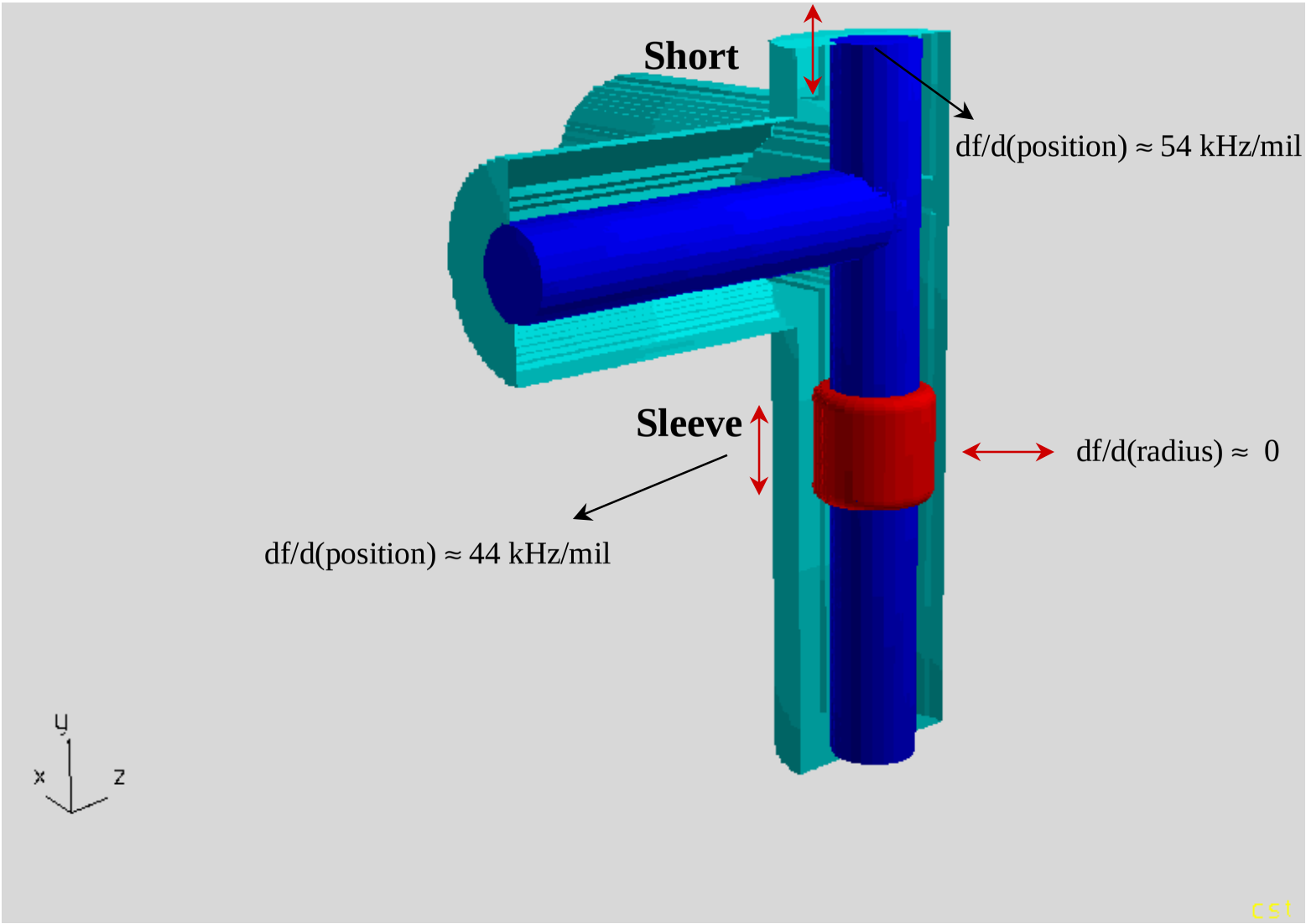

Snapshot of the Magnetic Field

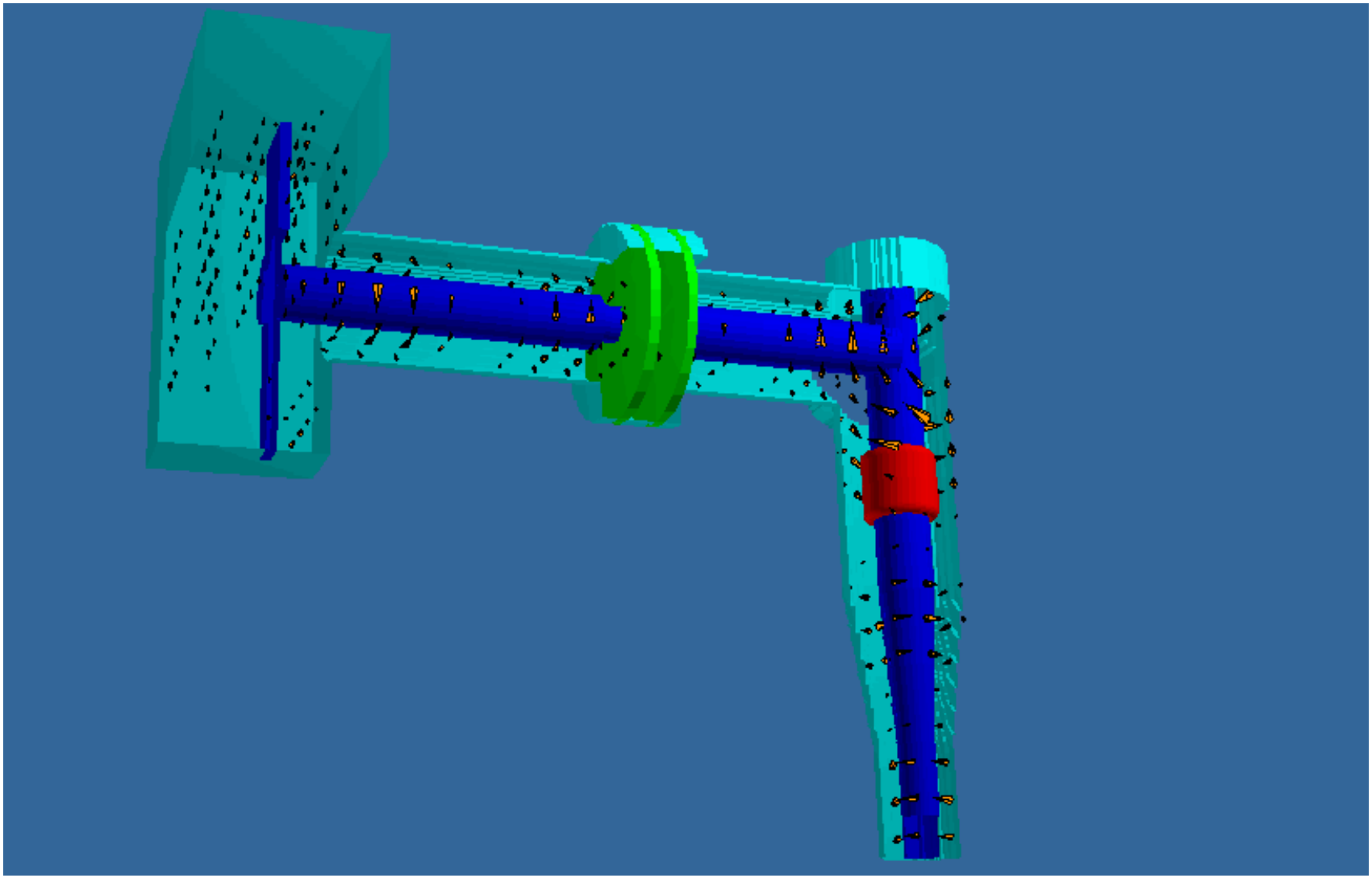

LANSCE
Los Alamos Neutron Science Center
Los Alamos
NATIONAL LABORATORY

Snapshot of the Electric Field

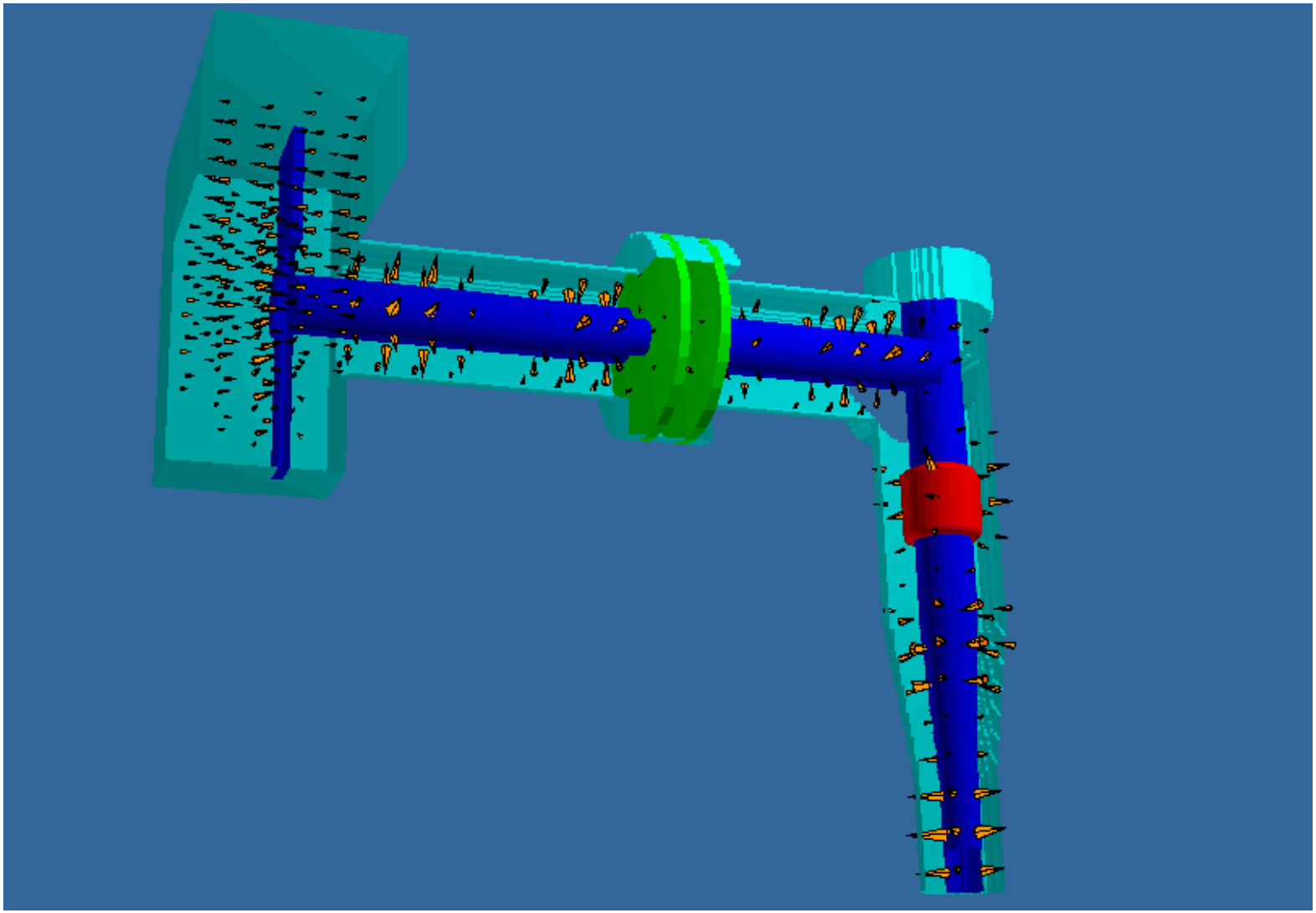

LANSCE
Los Alamos Neutron Science Center
Los Alamos
NATIONAL LABORATORY

Snapshot of the Surface RF Currents

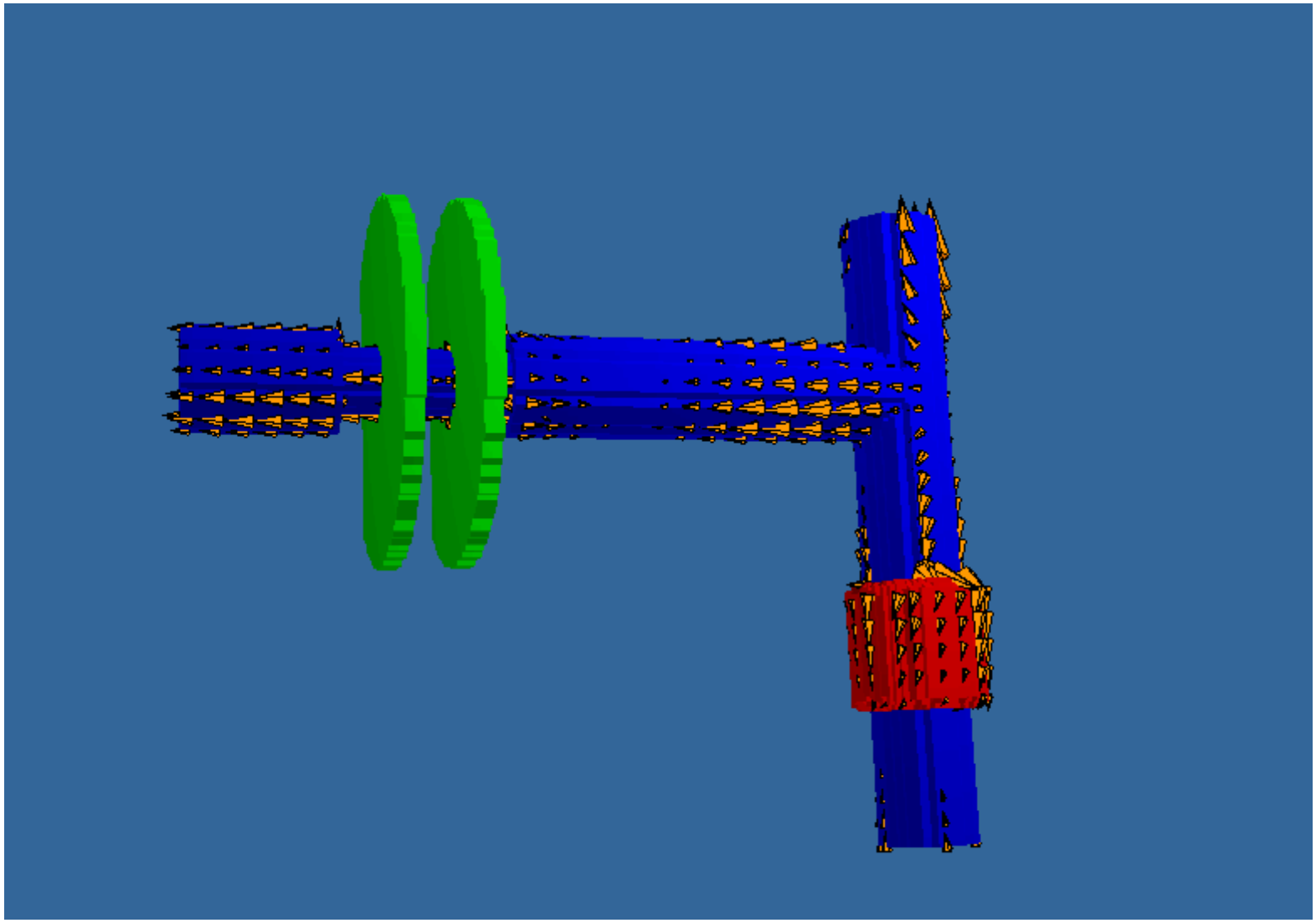

LANSCE
Los Alamos Neutron Science Center
Los Alamos
NATIONAL LABORATORY

Modeling Results

The surface rf power losses are quoted for 210 kW traveling wave power. The worst case estimate (standing wave at full reflection) indicates no critical field or rf-loss enhancements.

S21 / P_{trans}	-0.0002 dB / >99.99%
S11 / VSWR	-52.9 dB / 1.005
Bandwidth	VSWR < 1.05 for $\pm$ 2.5 MHz
$P_{peak@surface\ (sleeve)}$	0.20 W/cm^2
$P_{peak@short}$	0.26 W/cm^2
$P_{peak\ in\ 6\ 1/8\ coax}$	0.06 W/cm^2
$P_{peak\ in\ 4\ in\ coax}$	0.15 W/cm^2

LANSCE
Los Alamos Neutron Science Center
Los Alamos
NATIONAL LABORATORY

Average Surface RF Losses

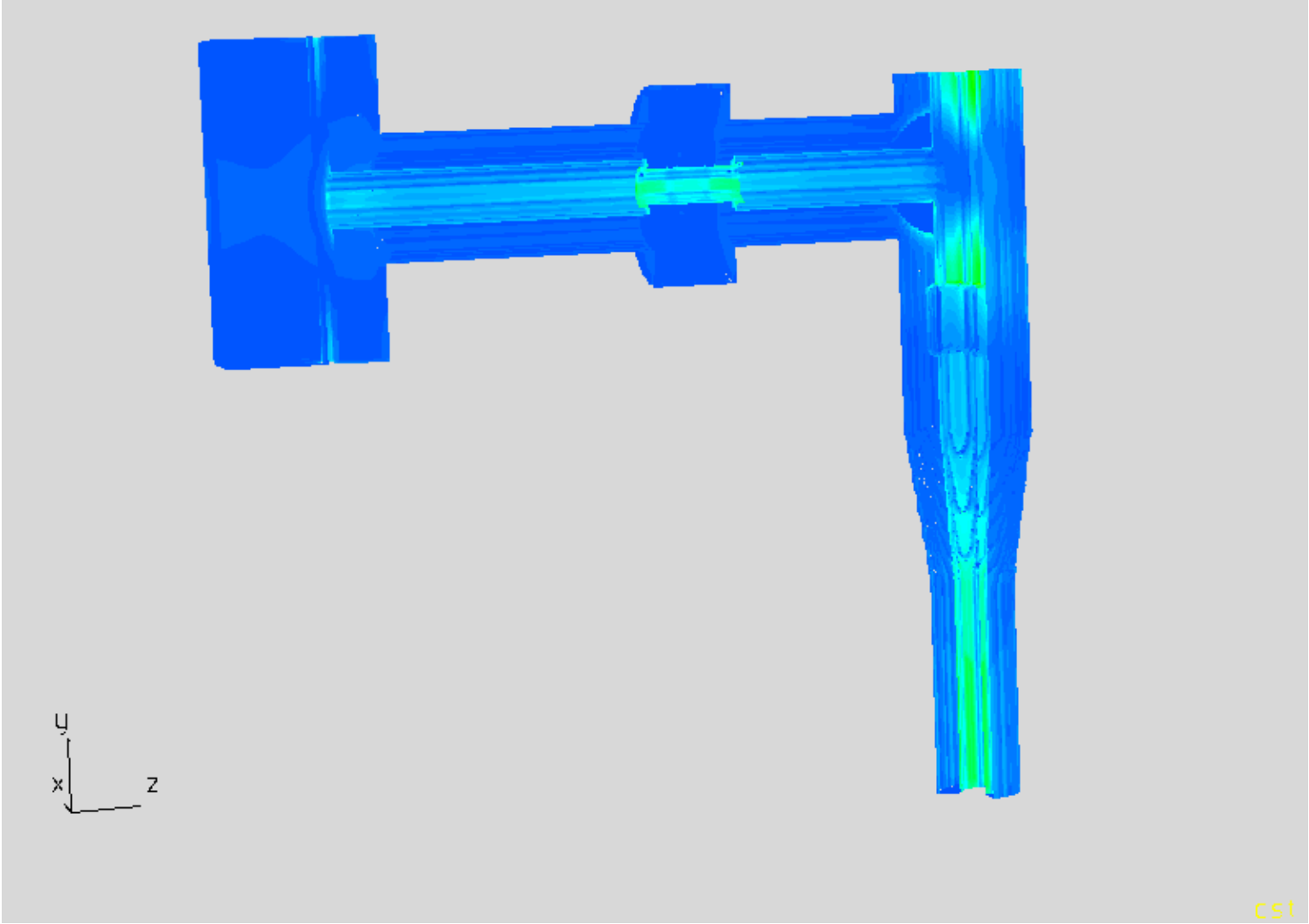

Surface RF Losses for Normal Beam Operation

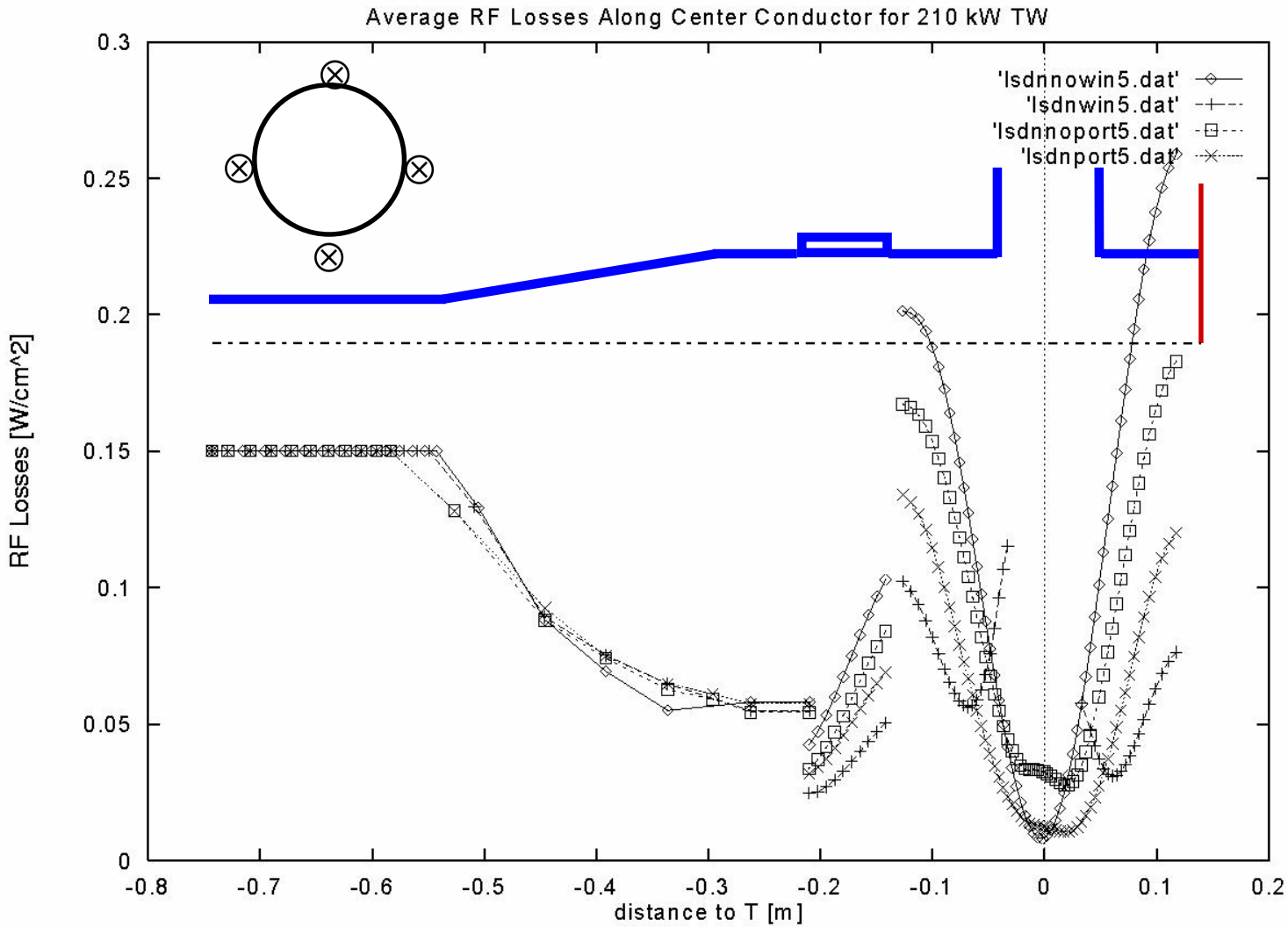

LANSCE
Los Alamos Neutron Science Center
Los Alamos
NATIONAL LABORATORY

Surface RF Losses for Full Power Reflection

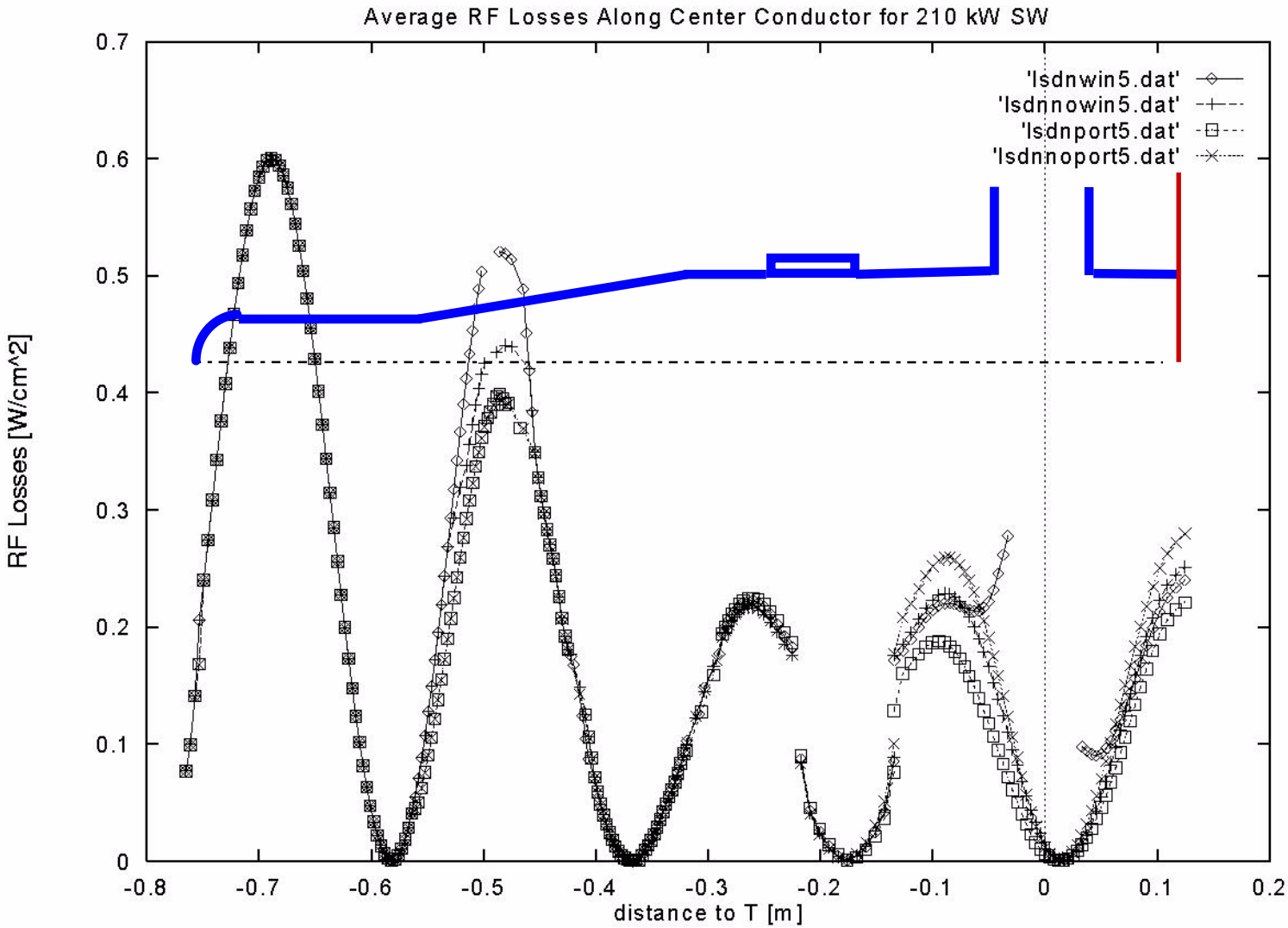

Axisymmetric, finite difference thermal model of power coupler has been developed

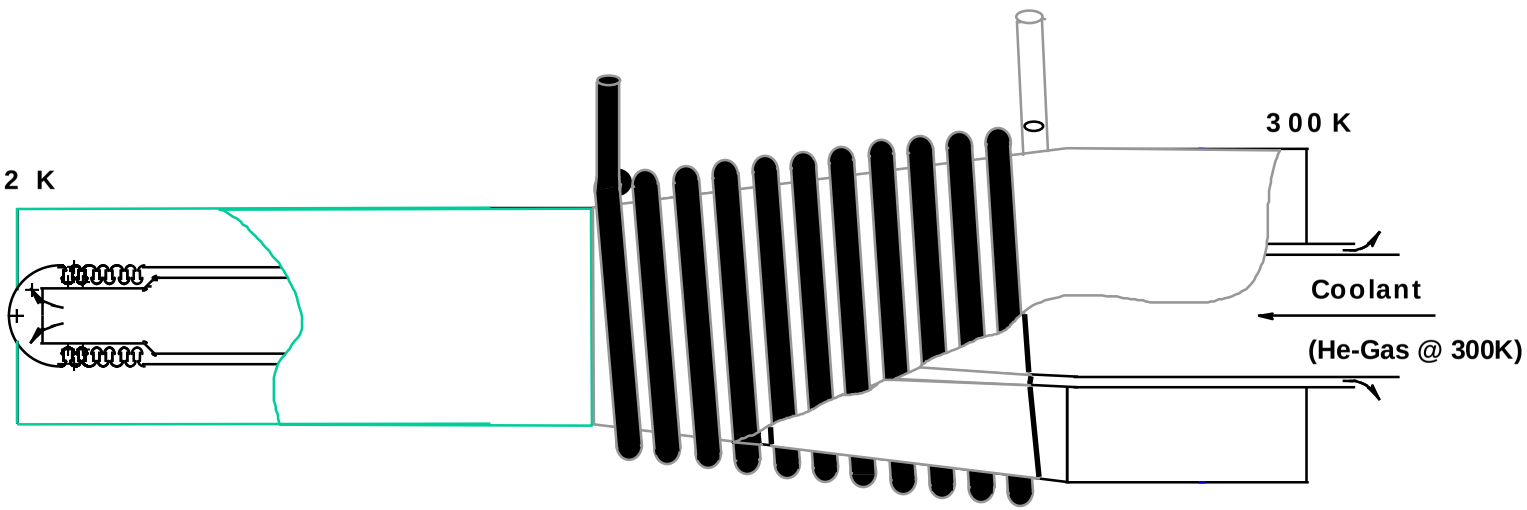

Thermal model has over 200 nodes using the Sinda simulation code

Heat transfer mechanisms:

- **Outer Conductor**
  - * conduction (stainless steel, copper plating, niobium)
  - * radiation (gray body, diffuse scattering)
  - * RF heating (distributed, temperature dependent resistivity)
  - * internal forced convection cooling (counter-flow HEX)

- **Inner Conductor**
  - * conduction (copper)
  - * radiation (gray body, diffuse)
  - * RF heating(distributed, temperature dependent resistivity)
  - * internal forced convection (coolant stream for inner cond.)

LANSCE
Los Alamos Neutron Science Center
Los Alamos
NATIONAL LABORATORY

Inner conductor, 210kW traveling wave, distrib. power

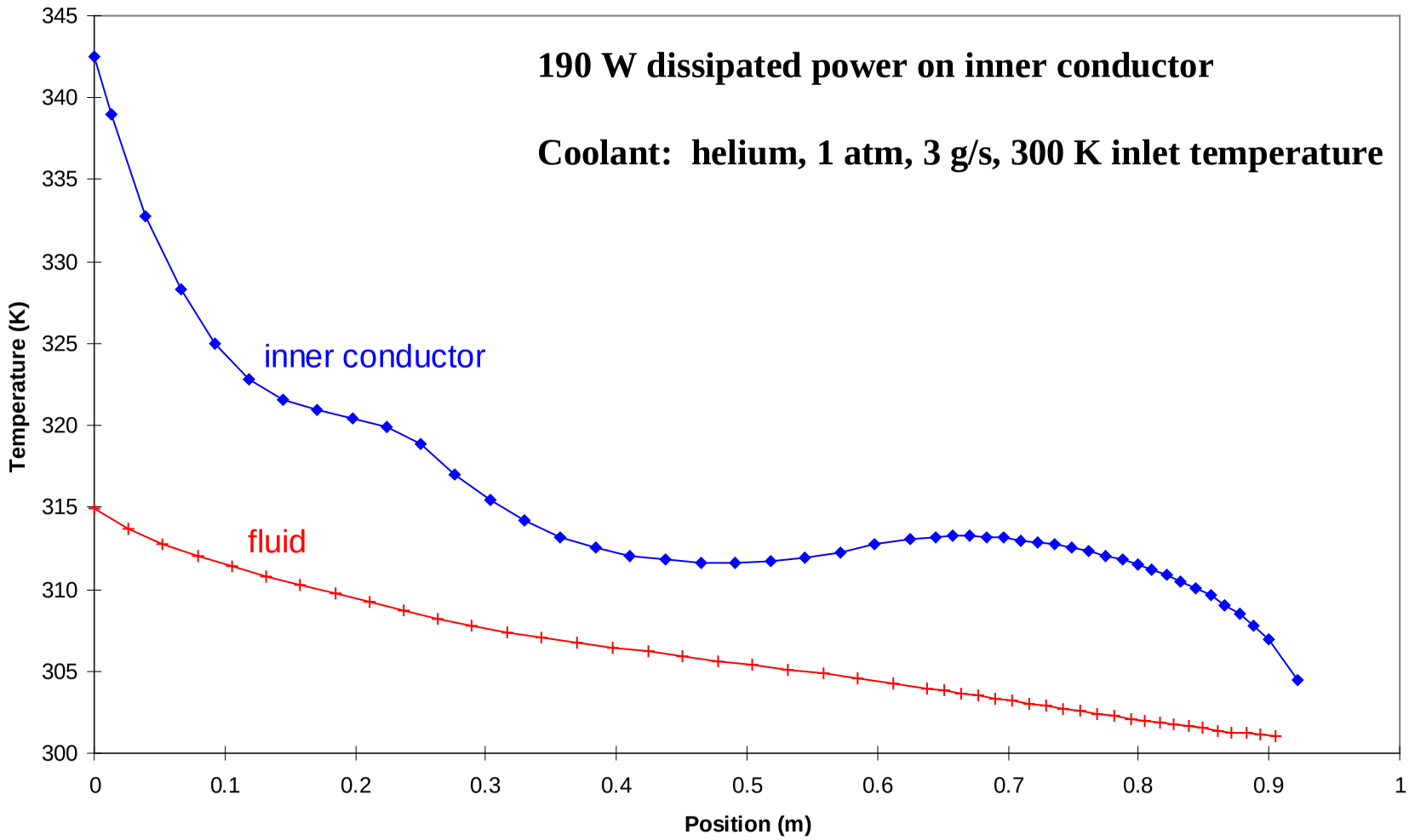

Inner conductor, 210kW, standing wave, distrib. power

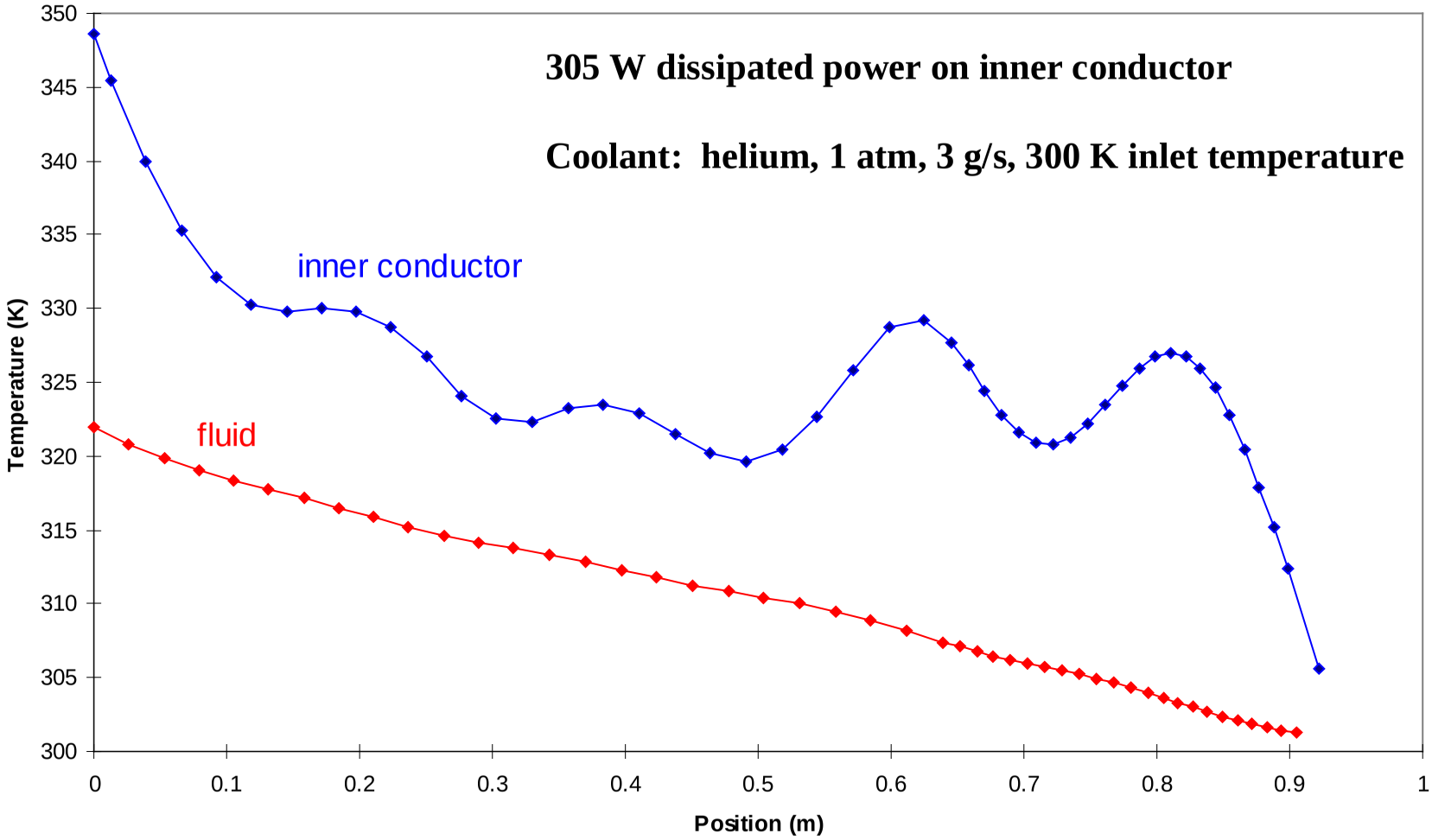

Outer Conductor Analysis

- **Minimize refrigeration input power**
- **reduce 2 K load**
- **single point intercept(s) vs counter-flow**
- **integration trade-offs with cryo-plant**
  - **2.6 K vs 4.6 K supercritical He for thermal intercepts**
  - **number of bayonets (inlets)**

Type of Results Possible

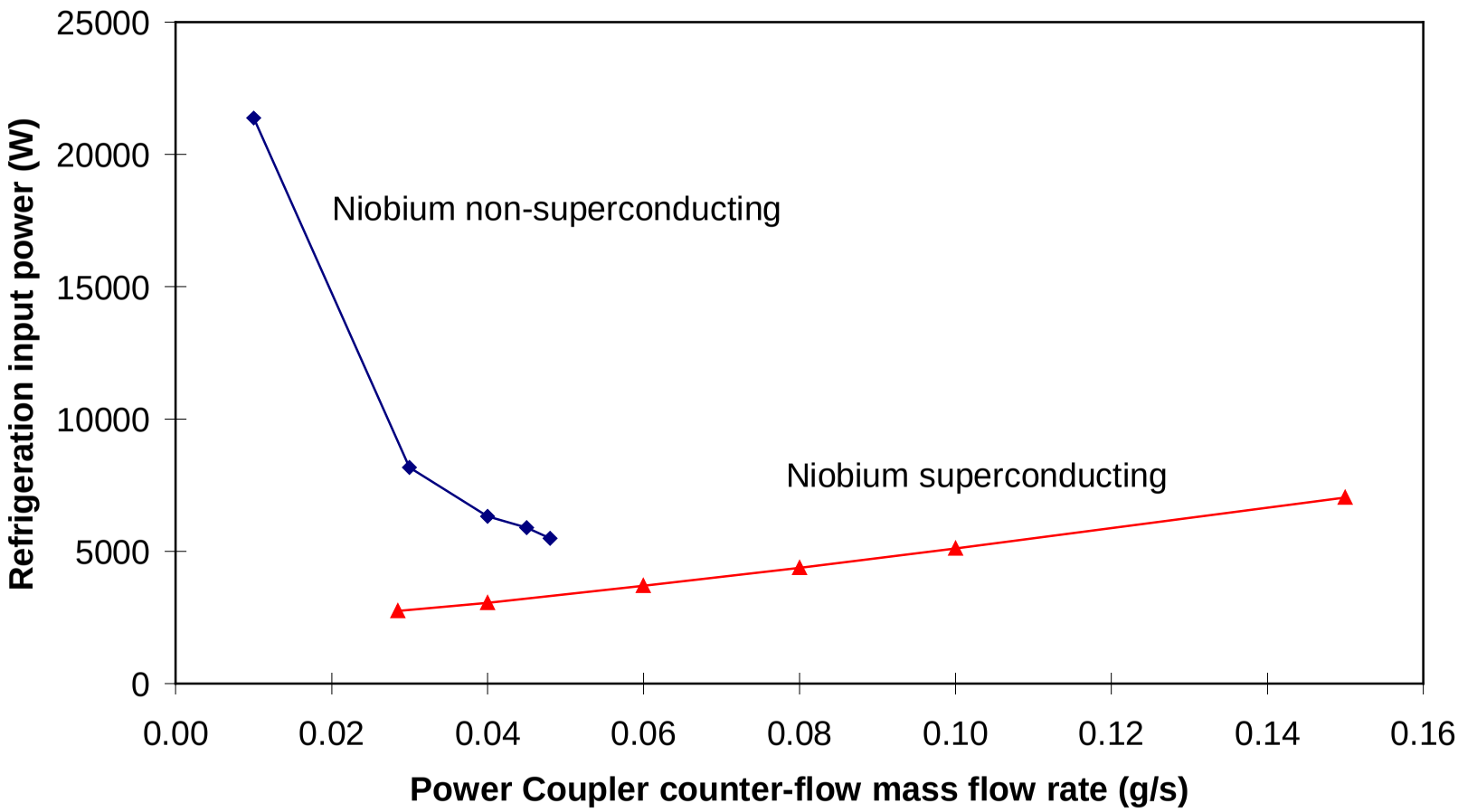

The Quarterwave Stub Test

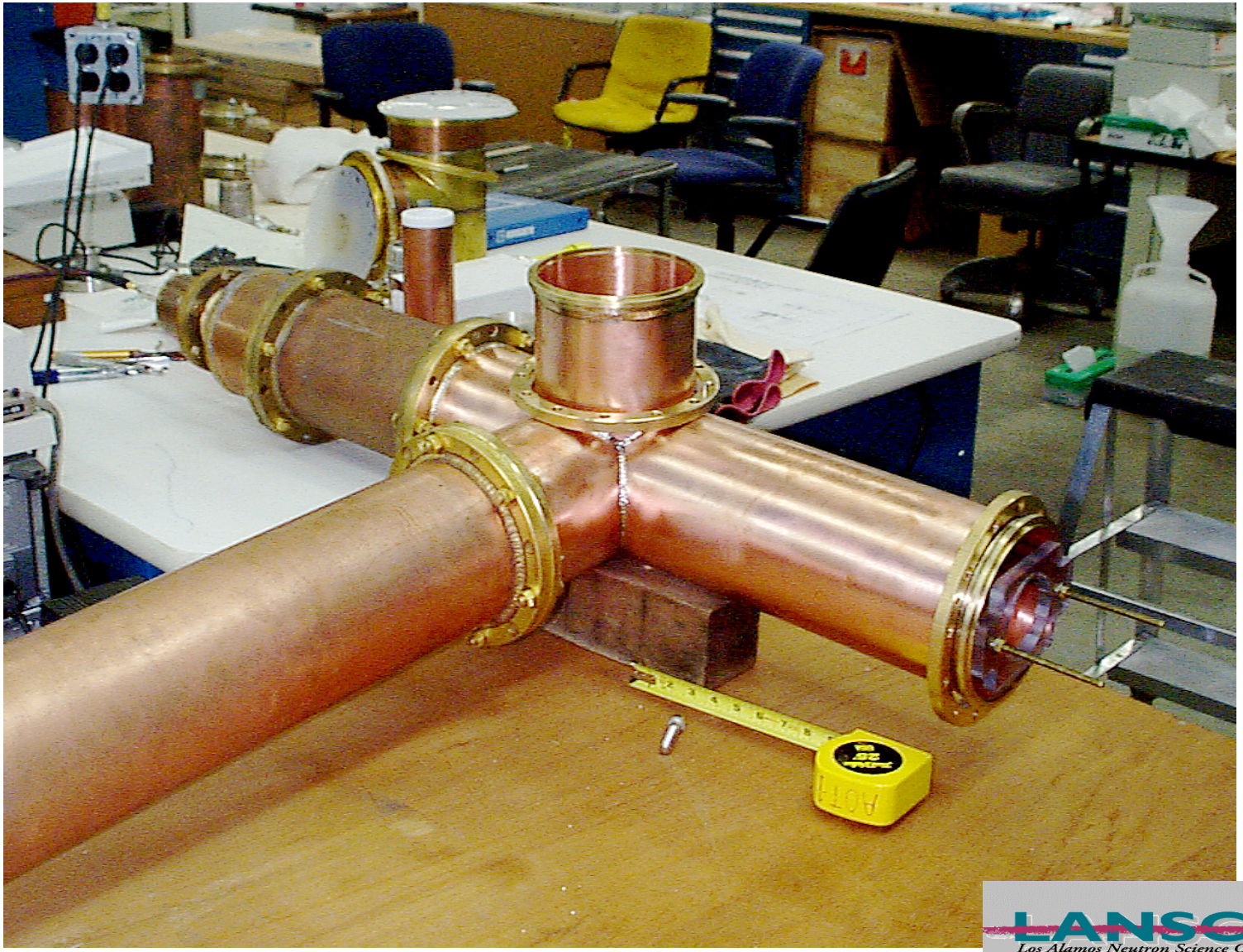

LANSCE
Los Alamos Neutron Science Center
Los Alamos
NATIONAL LABORATORY

Conclusions (Design Work)

- The cavity design is complete
- Single cell tests confirm the simulations
- 5-cell cavities are under construction
- The cavity-beam interactions are well understood

- We have a well advanced design of a power coupler
- The coupler development achieved some integration of the rf, mechanical and thermal issues
- We are preparing fabrication drawings to get test couplers built
- Lab results from a coupler test stand can be expected within a year

LANSCE
Los Alamos Neutron Science Center
Los Alamos
NATIONAL LABORATORY

Conclusions (Design Tools)

- **Modern electromagnetic modeling tools allow a detailed understanding of the structural parameters even before the first laboratory test**
- **Interaction between electromagnetics simulations and thermal/stress analysis is important for this detailed understanding**
- **Capabilities and price of recent computer hardware allows the investigation of very accurate 3D models**
- **The best tools for a design depend on the specific needs of a problem (we used MAFIA, SUPERFISH, HFSS)**

LANSCE
Los Alamos Neutron Science Center
Los Alamos
NATIONAL LABORATORY