Published in the Proceedings of the 10th Workshop on RF Superconductivity, Tsukuba, Japan, September 2001, LA-UR-01-5467

DESIGN AND FABRICATION OF SCRF CAVITIES FOR THE APT CONTINUOUS-WAVE PROTON LINAC

R. Gentzlinger, K.C.D. Chan, W. B Haynes, J.P. Kelley, F. Krawczyk, R. Mitchell,
D. Montoya, D. Schrage, B. Smith, T. Tajima, Los Alamos National Laboratory
Los Alamos, NM 87545, USA
J. Kuzminski, General Atomics, San Diego, CA 92186, USA
B. Rusnak, Lawrence Livermore National Laboratory, Livermore, CA 94550, USA
H. Safa, CEA Saclay, 91191 Gif-sur-Yvette, France

Abstract

At Los Alamos National Laboratory, a prototype design of proton superconducting cavities has been developed for the Accelerator Production of Tritium (APT) project. These cavities are designed for β=0.64. They have five cells and operate at 700 MHz. They will operate at 2.15 K in a liquid-helium bath contained in an unalloyed, Grade 2 titanium vessel. Six cavities were manufactured with RRR-250 niobium, one by Los Alamos and five by industry. This paper discusses both the design and fabrication of the cavity and helium vessel, and the experience gained during the fabrication process.

1. INTRODUCTION

Throughout the life of the APT program, the accelerator architecture was revised several times. The final high-energy end of the accelerator incorporated two different beta (β=0.64 and β=0.82) cavities. The transition energy from room temperature is at 240 MeV. The β=0.64 cavity was thought to be the most challenging of the two designs. An Engineering Design and Development (ED&D) program was started to develop the cavity design.

Both the β=0.64 and 0.82 cavities were designed with similar titanium liquid helium vessels. A vessel-within-a-vessel design was used in both cases. The inner vessel has the responsibility of providing adequate support for the active cavity tuners. The outer vessel, which encloses the inner vessel, has the primary function of helium storage. The vessel holds approximately 125 liters of liquid helium for the β=0.64 five-cell cavity. The inner vessel is perforated to allow the liquid helium to reach the enclosed cavity. Figure 1 shows the design of the β=0.64 cavity and helium vessel.

The cavity and helium vessel assembly also includes the active cavity tuner assembly. The helium vessel also includes provisions for handling fixtures that enable technicians to do chemical polishing and high-pressure rinsing more safely and efficiently in the clean room.

2. CAVITY DESIGN DESCRIPTION

The development of the APT high-energy superconducting cavities has been described in detail in previous publications [1], so a brief description only will be given here. The integration of the titanium helium vessel onto the cavity will be described.

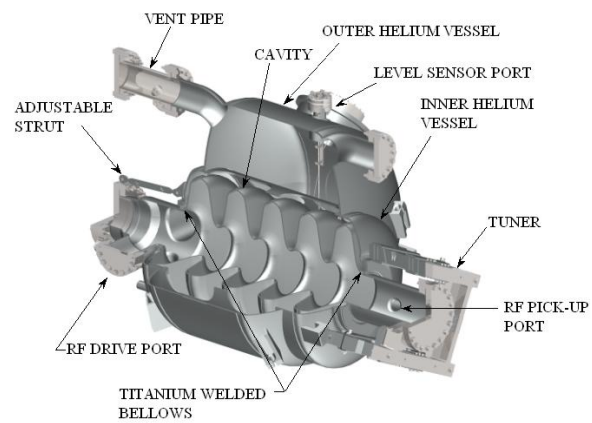

Figure 1. APT β=0.64 cavity with helium vessel.

The APT elliptical cavities went through several iterations before the final design was adopted. The designs for the β=0.64 and β=0.82 cavities were identical except for the shape of the cavity cells. Both cavities incorporated two power couplers, two high-order-mode (HOM) couplers, and one RF pick-up port. The design followed the original goal that off-the-shelf technology would be used, and that no research and development would be required. As a result, pure niobium sheet (RRR 250) was adopted for the cavity material. Niobium sputtered on copper seemed too risky and was not considered. Established techniques for forming the cavity cells were utilized. Deep-drawn tubes made from low RRR material were used for almost all cylindrical applications. The power-coupler side of the cavity used rolled and electron-seam-welded tubes for the beamtube. The original cavity design incorporated low RRR tubes (which were deep drawn) but was revised to high RRR material during the cavity fabrication cycle. It was thought to be too risky to use low RRR material in this location since a sizeable percentage of the cavity field extends into the tube. It was assumed this could cause the cavity to quench prematurely. Schedule constraints did not allow for high RRR tubing to be deep drawn for the application. However, some tubes were fabricated later on

so they could be incorporated in subsequent cavity fabrications.

The mechanical interfaces of the cavity are stainless steel Conflat™ flanges. These flanges were chosen due to the experience at LANL. The joint resulting from using Conflat™ flanges with copper gaskets was found to be highly reliable for sealing against super-fluid leaks. The flanges are brazed using nioro (82% gold and 18% nickel) to the niobium tubes on cavity ports fabricated at LANL [2]. These joints meet the requirement, being able to support at least a 4000 psi shear stress. The one cavity fabricated by a US supplier also used nioro as the braze material. The four cavities made by CERCA of Romans, France, used copper as the brazing material. This braze joint is also capable of meeting the 4000 psi shear stress requirement.

Stiffeners between the cells were not incorporated into the cavity design. The original cavity design incorporated 0.125-inch (3-mm) thick niobium, and a 5-degree cavity wall slope required stiffeners [3]. The mechanical stresses resulting from pressure fluctuations in the cryogenic system exceeded the material yield strength. Redesigning the cavity to have a 10-degree wall slope and a material thickness to 0.164 inch (4 mm) allowed the stiffeners to be eliminated (β=0.64 cavity design). The mechanical stresses are now far enough below the yield strength of the material so as not to be a problem [4]. However, the cavity is now susceptible to mechanically resonating at frequencies below 100 hertz (microphonics). The original requirement of a 100-hertz threshold was rescinded since the energy at particular modes is unknown at this time. Power spectral densities (PSD) of other accelerator facilities (LEDA tunnel) were used for the dynamic analysis. After reviewing both the transverse displacements caused by the cavity resonating in particular "bending" modes and test results of a cavity statically displaced transversely (replicating the mode shapes) while measuring the cavity's rf frequency [5], it was found the dynamic displacements are not a problem. However, if the actual accelerator facility produces unacceptable cavity displacements, other remedies are available without the necessity for stiffeners. "Bumpers" between the helium vessel and the cavity could be incorporated.

The final component of the cavity assembly is the helium vessel bellows and heads. Reviewing the assembly process of the cavity will help explain why the heads had to be integrated into the fabrication of the cavity.

The design of the interface between the niobium beamtube and the titanium helium vessel end-bulkhead required an electron-beam weld. Two different joint designs were considered. The first utilized a filet weld and the second a butt weld. Sequencing of the assembly dictated that the weld had to be made from the cavity side only. If the joint required welding from both sides, the cavity ports could not be welded to the beamtube since the ports would block the line of sight of the electron beam to the joint. Once the bulkhead was installed, it would then block the line of sight of the electron beam to the beamtube/port interfaces. A butt joint welded from one side was adopted for the helium vessel to cavity interface since it was determined to be a more reliable joint. To facilitate this joint, a "tee" section was added to the beamtube assembly. The nipples/cutoffs were first pulled in the beamtube before a .015-inch step, used to maintain a close fit-up between the tee and the beamtube, was machined onto one end. The tee was then welded to the beamtube using two electron-beam welds. The pulled nipples were low enough and the angle of the beam steep enough that the pulled nipples did not block access to these welds. Also, the height of the tee was kept to a minimum to ensure it did not block the electron-beam line of sight to the pulled nipple/port interfaces/welds. It is important that the weld prep in the tee (the interface to the bellows) is not machined until after the welding of the tee to the beamtube is completed. Distortions in the tee from the welding could cause problems later in the assembly sequence. The first cavity fabricated with a helium vessel encountered this problem. After the tee has been welded to the beamtube and final machined, the ports are then welded to the beamtube. These assemblies are then leak-checked to ensure there are no imperfections in the joints. Figure 2 shows the coupler beamtube with the ports and tee installed.

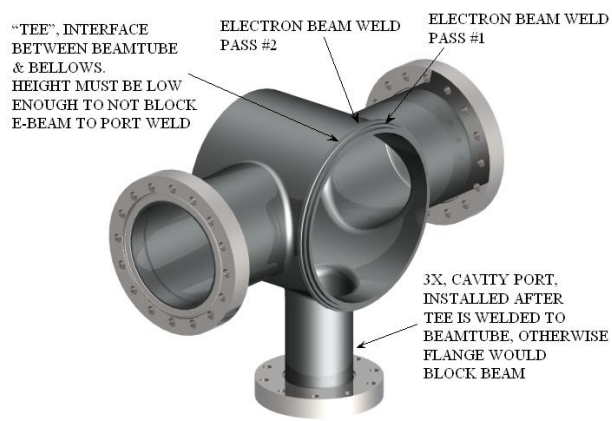

Figure 2. Coupler beamtube of the β=0.64 cavity.

Once the ports are installed, the titanium vessel bulkhead can be welded to the tee. The weld prep on the titanium bellows and tee should be reviewed with the cavity fabricator prior to finalizing its design. The APT cavities utilized a 0.15-inch step to locate the head to the beamtube. The step made it harder to achieve a good electron-beam weld. Figure 3 shows the titanium head welded to the coupler beamtube.

After the helium vessel head is welded into the assembly, the cavity end-cell can be welded to the beamtube. This weld has to be made from the inside out since the helium vessel head is blocking the line of sight of the electron to this location. Figure 4 shows the installation of the end-cell to the beamtube assembly.

The end-flange to end-beamtube braze assembly can then be welded to the beamtube. This entire assembly is leak-checked prior to beginning with the next assembly

step. The RF pick-up beamtube is assembled using the same procedures.

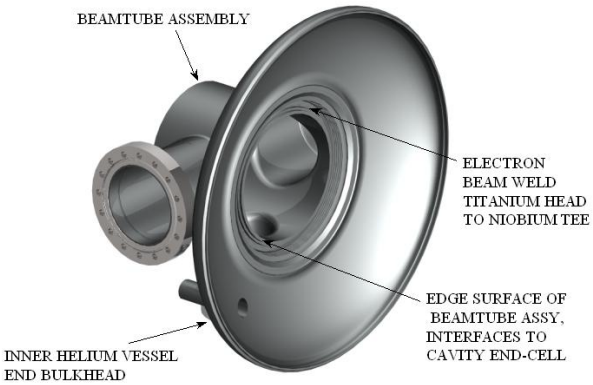

Figure 3. Helium vessel head welded to cavity beamtube.

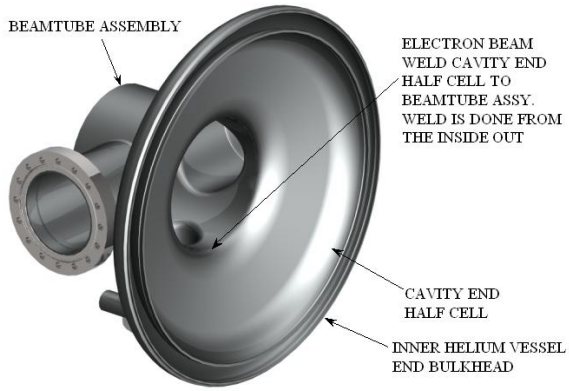

Figure 4. Cavity ½ cell welded to beamtube assembl

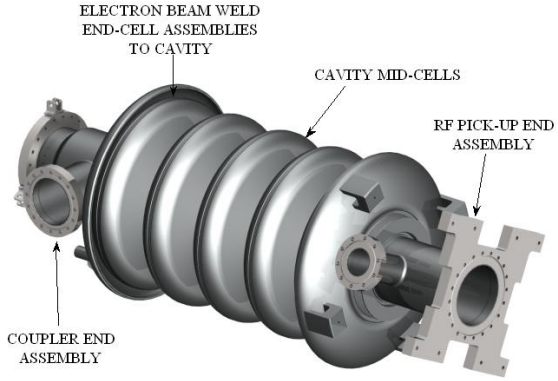

Figure 5. Complete APT β=0.64 cavity w/out helium vessel.

The two-beamtube assemblies can then be electron-beam welded to the center section of the cavity. The weld between the end-cell and adjacent mid-cell is made from the outside, using beam parameters that give a smooth cosmetic-under-bead joint. It may be necessary to pull the helium vessel bulkheads back slightly to ensure they do not block the line of sight to this weld. Figure 5 shows a complete APT β=0.64 cavity ready for the first phase of rf testing.

Each completed cavity was rf-tested at this point in the fabrication cycle to measure the quality factor and the accelerating electric fields. This information was used to benchmark subsequent fabrication steps to see if they negatively impact cavity performance.

3. INNER VESSEL FABRICATION AND INSTALLATION

The inner vessel is fabricated from unalloyed, grade 2 titanium. Titanium was chosen for the helium vessel material for four reasons: The first is its solubility in niobium, which allows these metals to be electron-beam welded together. This assembly approach ensures super-fluid helium will not leak from the helium vessel to beamtube joint. The second reason is that titanium has a coefficient of thermal expansion similar to that of niobium. This reduces thermal stresses during cool-down and also reduces the requirement on the range of the active tuner. The third reason is that titanium will not have any residual magnetic fields in the welds, which will not decrease the quality factor (Q) of the cavity, thereby increasing the load on the cryogenic system. The last reason is similar to the first. If stiffeners were required during structural testing, it would be much simpler to attach the niobium end-cell stiffener to a titanium surface than to a stainless steel one. The inner vessel is made from five components: two elliptical heads, two edge-welded bellows, and a cylindrical shell as shown in Figure 6. The heads and the bellows are an integral part of the cavity assembly, as shown above.

The elliptical heads are fabricated from 6.4-mm (0.35-inch) thick material. A deep-drawing process forms the re-entrant part of the head, which in turn allows the length of the bellows to be maximized. After the re-entrant portion is formed, the 63.5-mm by 228.6-mm semi-minor by semi-major elliptical head is formed by hot spinning. Hot spinning of the head keeps the material from cracking, especially where the bending radius is a minimum. The aspect ratio of the head cannot be increased without the head blocking the line of sight of the electron beam to the first cavity equator weld. The hot forming will leave a rough black oxide residue on the titanium surface. The surfaces are then ground to remove the residue and any deep scratches. A pickling process to remove the remainder of the oxidized layer follows the grinding. As a result, the surface will have a 63 root-mean-square (rms) micro-inch (□ inch) finish that will be easy to clean in the cleanroom. Then the tuner interface and strut support brackets are Tungsten Inert Gas (TIG) welded to the heads in an open room using specially developed argon gas shields. Final machining is then performed on the outer diameter weld prep, the tuner interface brackets, and the bellows interface. Afterward the edge-welded bellows is welded to the assembly. A

leak-check of $1x10^{-10}$ torr-liters/sec helium is conducted on the assembly to ensure it is leak-tight. The assemblies are then shipped to Los Alamos, where the heads are leak-checked again. After the second leak-check, the heads are repackaged and shipped to the cavity manufacturer for integration into the cavity assembly.

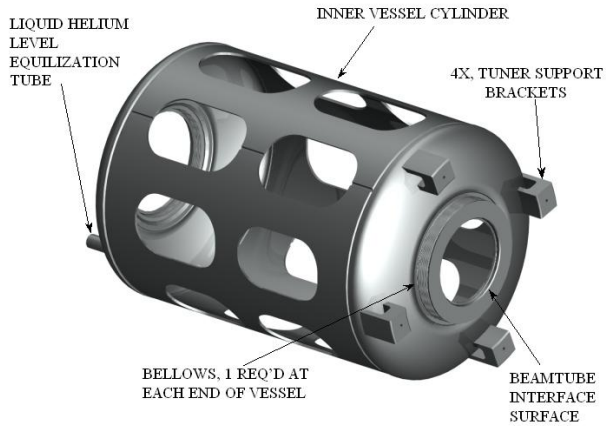

Figure 6. The APT inner helium vessel.

An edge-welded titanium bellows was chosen to provide the necessary compliance between the helium vessel and the cavity. Using a formed bellows was investigated, but it could not fulfill the travel requirements in the available envelope. The bellows must be capable at cryogenic temperature (2.15 K) to have a lifetime-repetition count of 16,000 cycles. The number of cycles was determined by calculating the number of days the cavities would have to be re-tuned over the expected forty-year life of the accelerator. This established the fatigue life of the bellows. The required maximum stroke of the bellows is ± 1.5 mm. The bellows also had to fulfill the same pressure requirements as the helium vessel (2.2 and 3 atm at room and operational temperatures, respectively). The limited experience of bellows manufacturers in delivering a product meeting these cryogenic design requirements made product reliability questionable. A test program was undertaken at Jefferson National Accelerator Test Facility (TJNAF) to cycle the bellows by ± 1.5 mm at 77K until the bellows failed. The temperature of 77 K was chosen over 4 K because titanium does not undergo a ductile-to-brittle transition in this temperature range (from room temperature to 4 K), most of the thermal contraction has occurred by 77 K and liquid nitrogen is much cheaper than liquid helium. The bellows were helium-leak-tested every 5,000 cycles. The frequency of tests was decreased as the bellow's cycles increased without failure. The test was halted after the bellows was cycled 270,000 times without failure [7].

The cylindrical shell is fabricated from 4.7-mm-thick titanium in two pieces. The large racetrack holes allow the liquid helium to reach the cavity. The holes are cut using a high-pressure water jet before the shell is rolled. Once the shell is rolled, brackets for supporting the instrumentation and bumper support brackets are welded in place. Once the shell is ready to be installed on the cavity, it is pickled to ensure a smooth, easy-to-clean surface results. Special blankets are wrapped around the cavity to ensure that any resulting weld spatter does not contaminate the outer surface of the cavity. Special actively cooled shields are required to ensure the temperature of the niobium does not exceed 200 ºC. The two panels are then placed over the cavity and clocked into the correct orientation. The panels are welded circumferentially to the two end bulkheads and longitudinally to each other. The welds are constantly purged with clean argon gas. The shields and blankets are removed through the racetrack holes. Figure 7 shows the inner helium vessel installed on the cavity. Once the inner vessel is installed, the assembly is then rf-tested to see if the procedure degraded cavity performance. After the testing is complete, the bumpers are added between the cavity and the inner helium vessel. The bumpers are individually machined to fit the gap snugly.

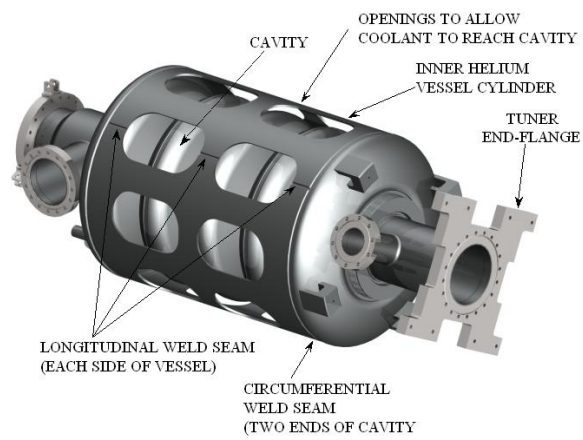

Figure 7. Inner vessel installed over cavity.

4. OUTER VESSEL FABRICATION AND INSTALLATION

The outer vessel, shown in Figure 8, is also fabricated from unalloyed, grade 2 titanium. The 6-mm-thick by 101.6-mm by 355.6-mm (semi-minor by semi-major, respectively) elliptical heads will be spun hot, as the inner vessel heads were. The shell of the vessel is also made from 4.8-mm-thick titanium. The identical weld preps and procedures are used to attach the heads to the cylindrical shell.

The ED&D outer vessel will have four access ports around the cylindrical shell. They will provide access to the inner vessel, cavity, and instrumentation installed inside. The design allows the covers to be welded closed, but they can be opened by grinding the weld off without compromising the integrity of the cylindrical shell or contaminating the inside of the vessel with chips. The weld design also allows the cover to be welded on without contaminating the cavity with weld spatter.

Machined parts for mounting the cryomodule spokes are welded to the elliptical heads at each end of the helium vessel. At operating temperature the load in the

spoke exceeds 9000 N. The spoke interface to the fitting is spherical, which allows the spoke to rotate during cool-down and at the same time maintain a surface contact rather than a line or a point contact. The fittings are also designed to have enough weld shear area to meet the fracture toughness criterion. Lastly, the spoke fitting design must allow itself to be easily cleaned when the vessel is in the clean room.

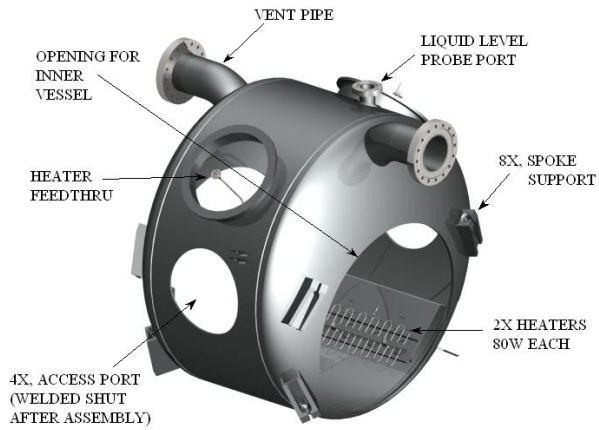

Figure 8. Outer helium vessel.

Internal to the outer vessel is the mounting bracket for the heaters. Four 80-watt heaters are planned for each helium vessel. They will allow the load on the cryogenic system to remain constant. If a cavity has to be detuned and taken off-line, the wattage in the heater is turned up to equal the thermal load the cavity had. The heaters will also be used to boil off the liquid helium whenever maintenance is required.

A liquid-level probe will be installed on each cavity. Having a sensor on each cavity allows a redundancy to the level measurement. The helium reservoir of each cavity is tied together via a leveling tube welded to the bottom of each vessel. The leveling probe port is positioned on the top of each helium vessel, as close to the center as possible. The probe will fit down through an opening in the inner vessel and pass close to one of the cavity irises. This allows the probe to reach very close to the bottom of the vessel. At the end of the probe, a carbon resistor will be installed. The resistor is used to determine when liquid helium is just starting to collect at the bottom of the vessel.

Four diodes will be installed on each end of the inner helium vessel (top and bottom) to measure the temperature of the vessel during vessel filling. Mounting provisions were added to the inner vessel for the diodes. The diodes will be installed after the inner vessel is installed in the outer vessel.

One large disadvantage of a titanium vessel is interfacing to standard off-the-shelf components. For example, the cryomodule plumbing is planned to be 304 stainless steel, which cannot be TIG-welded to titanium. A development program was undertaken to fabricate transitions between stainless steel and titanium using inertia welding [8]. The transition piece must be leak-tight and show sufficient fracture toughness at the cryogenic operating temperature. Transitioning to stainless steel will allow inexpensive common components to be easily attached to the vessel.

The outer vessel is installed over the inner vessel by machining two 457-mm holes into each end in the elliptical heads. The interface on the head is beveled before welding to ensure a complete joint penetration is achieved. A filet weld is then added to give additional strength to the joint. Figure 9 shows the inner vessel assembly installed in the outer vessel.

Ceramic wire feed-throughs will be used to transfer the power and signals through the vessel wall. The ports are located on the 90-mm-diameter vent tube on the top and between the two outer vessels.

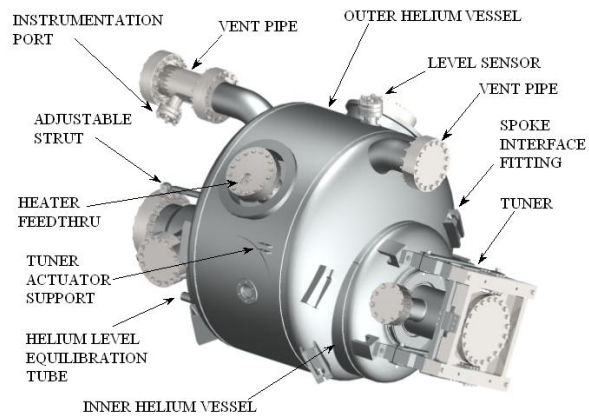

Figure 9. APT cavity installed in the helium vessel.

5. FUTURE PLANS

Titanium was chosen as the material for the liquid helium vessel for four qualitative reasons as mentioned earlier. The fabrication of the vessel was on the critical path, which didn't allow a more intensive quantitative comparison to be done. The titanium fabrication was very expensive and time-consuming. However, switching to stainless steel could impact other costs significantly while lowering the helium vessel fabrication cost to a lesser extent. A more detailed analysis will be performed before either titanium or stainless steel is chosen as the baseline helium vessel material.

6. REFERENCES

[1] R. Gentzlinger et al., LANL Memo: LA-UR-99-1462.
[2] W. Clark, LANL Memo: AOT-1:95-346.
[3] D. Schrage et al., LANL Memo: LA-UR-95-3151.
[4] R. Mitchell et al., LA-UR-00-488.
[5] R. Mitchell, LANL Memo: ESA-EA:00-115.
[6] T. Tajima et al., LANL Memo: LA-UR-01-5049.
[7] S. Morgan, TJNAF, Private Communication, 5/4/99.
[8] M. Cola et al., LANL Memo: LA-UR-99-1512.