# LANSCE Efforts Toward RF SC Cavity Development

**DOE/NSF Workshop on RF Superconductivity**
**July 29, 2003**

**Tsuyoshi Tajima**

**LANSCE-1 Superconducting RF Lab Team Leader**

**LA-UR-03-5678**

# Outline and Summary

- We have world-class facilities for SC Cavity developments.
- We have the capability for design, procurement, surface treatment, assembly and tests of SC cavities, power couplers and cryostats for various projects
- We have demonstrated our capability with world-class performance results
  - Elliptical single and multi-cell cavities for high velocity protons
  - Spoke cavities for low velocity protons
- We have been funded by:
  - Accelerator Production of Tritium (APT) 1996-2001
  - Advanced Accelerator Applications (AAA) 2002, discontinued support for accelerator portion in 2003 to focus on transmutation science.

# LANSCE has world-class facilities for SC cavity developments

2. Assembly with flanges, couplers, valves, etc. in a 2600 ft$^2$ Clean room

1. Ultra-pure water is used for HPR and assembly.

3. Set on the cryostat insert

140 ft.

100 ft.

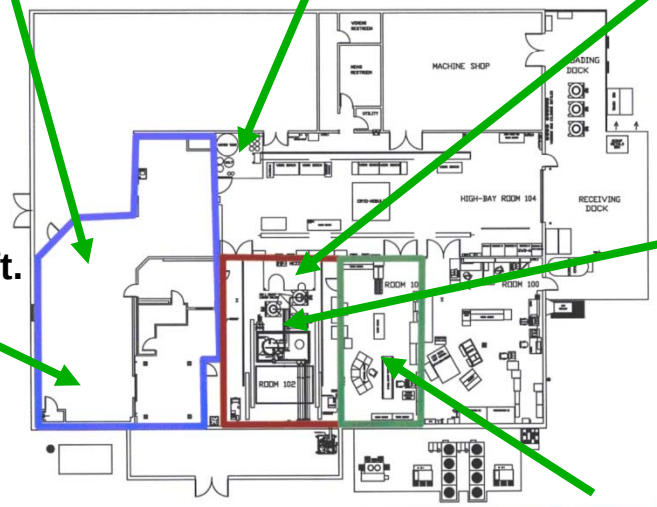


4. Inserted in a 38" cryostat with radiation shield

1. High-pressure rinsed in a clean room.

Control, tuning

Building MPF-17

# Six prototype APT $\beta$ = 0.64, 700 MHz, 5-Cell Cavities were built at LANL and in industry

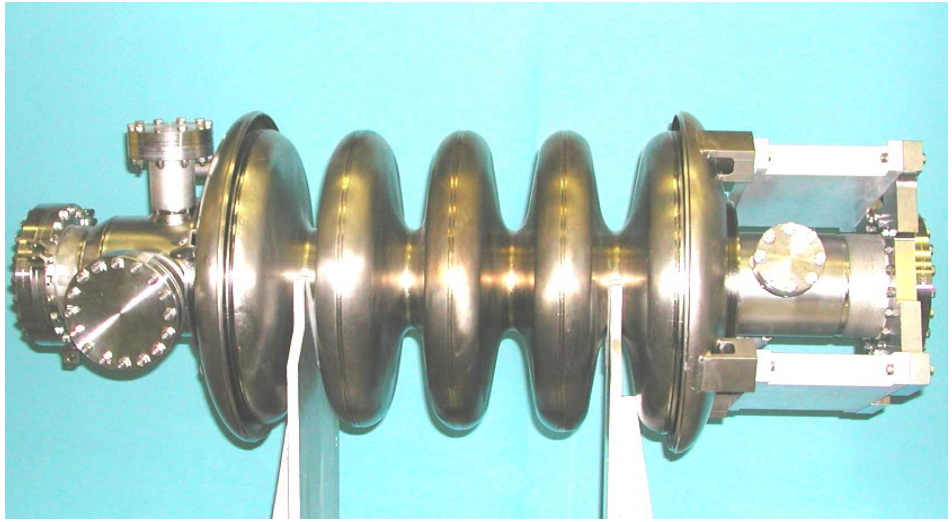

Cavity length : 116 cm
Cell diameter : 40 cm
Beam aperture : 13 cm

$E_{pk}/E_{acc}$ : 3.38
$B_{pk}/E_{acc}$ : 6.96 mT/MV/m

# All the cavities exceeded the APT design goal by a factor of 2 or better

**The achieved $E_{acc}$ = 12.4 MV/m was the world record among the low-β 700-MHz 5-cell cavities.**

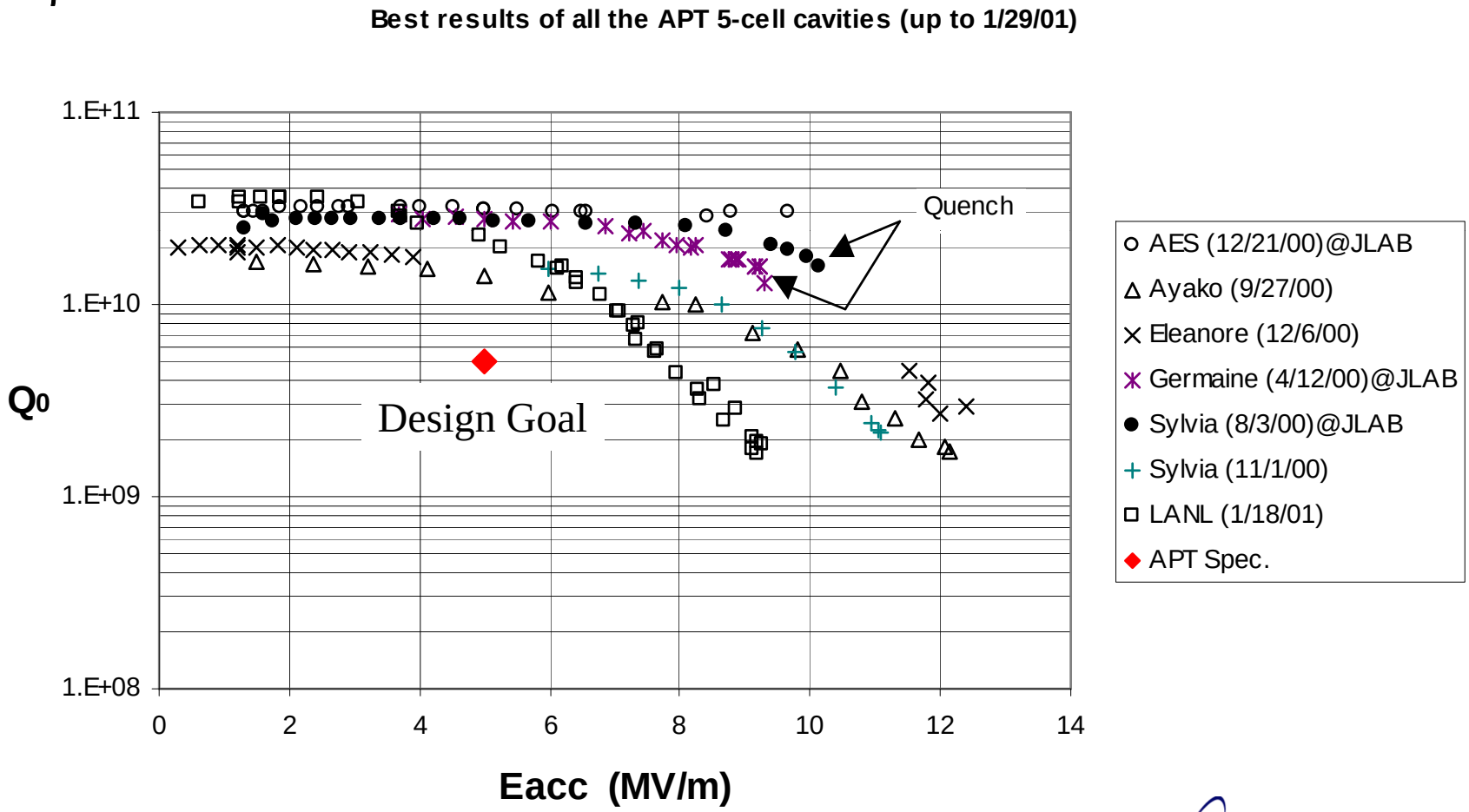

# Adjustable power coupler was designed, fabricated and successfully tested up to CW 1 MW.

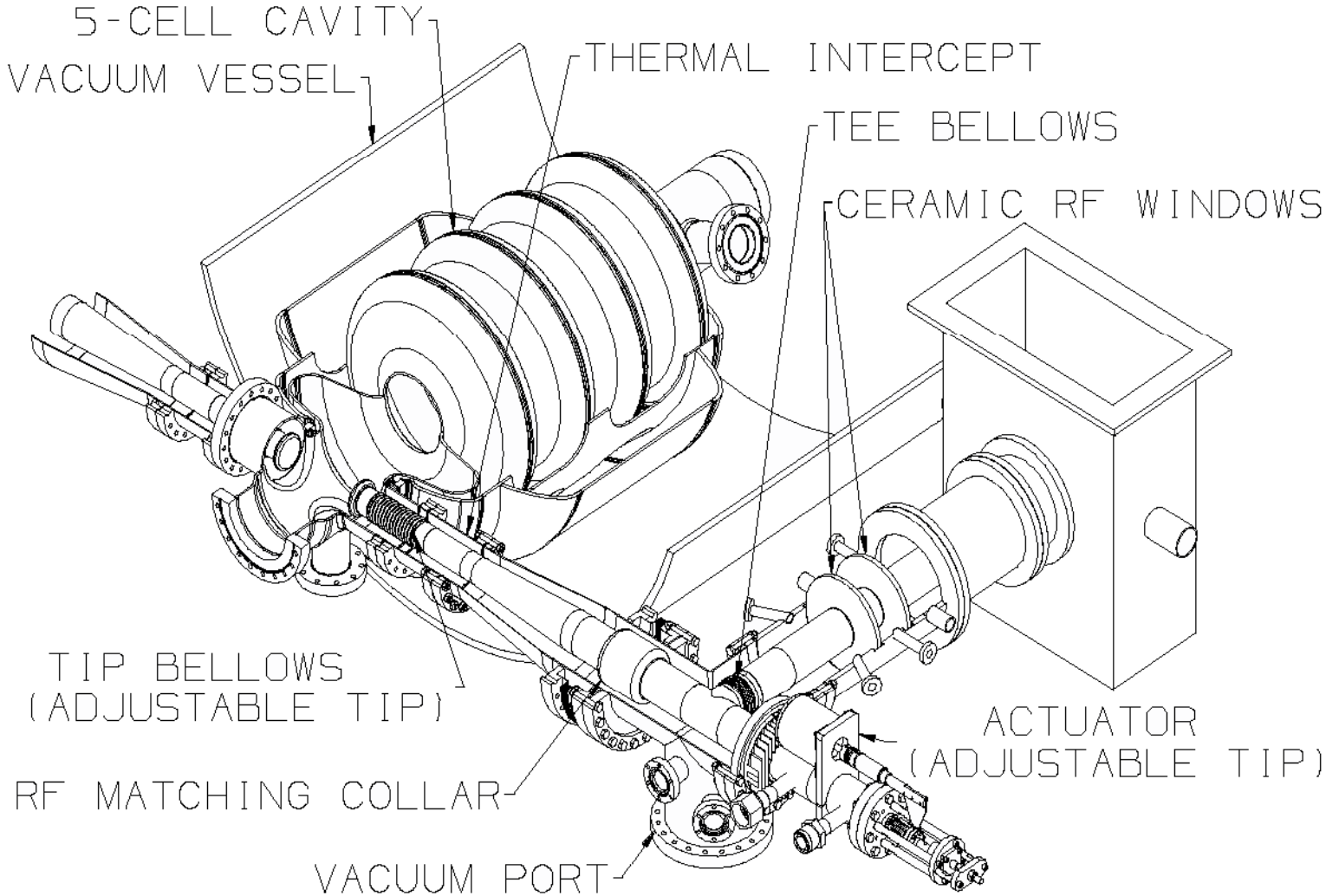

# Spoke cavity development started to replace the Low-Energy Sections of Proton Linacs with SC technology

- Studies have been carried out at ANL since late ’80s
- Advantages over elliptical cavities
  - Compact (~1/2 of the diameter of elliptical cavity for the same freq.)
  - Mechanically stable
  - Larger velocity acceptance
- Microwave Studio (MWS) is used for RF design
- MICAV and COSMOS/M are used for mechanical design

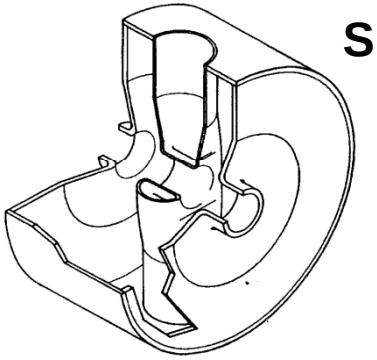

Spoke cavity

Mechanical design

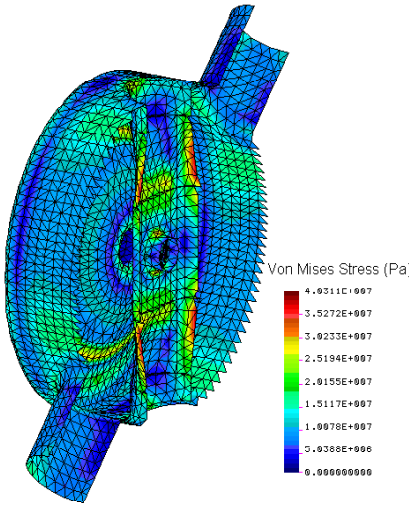


Stress under vacuum

RF design

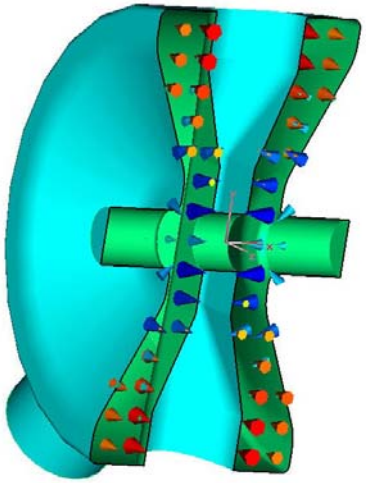

E-field (blue) and M-field (red)

# Two LANL/AAA β=0.175, 350-MHz, 2-gap spoke cavities were designed at LANL and fabricated in industry

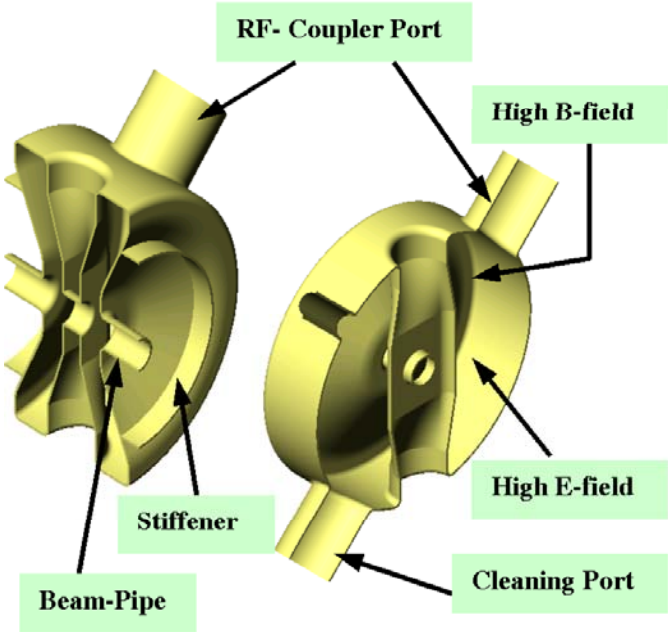


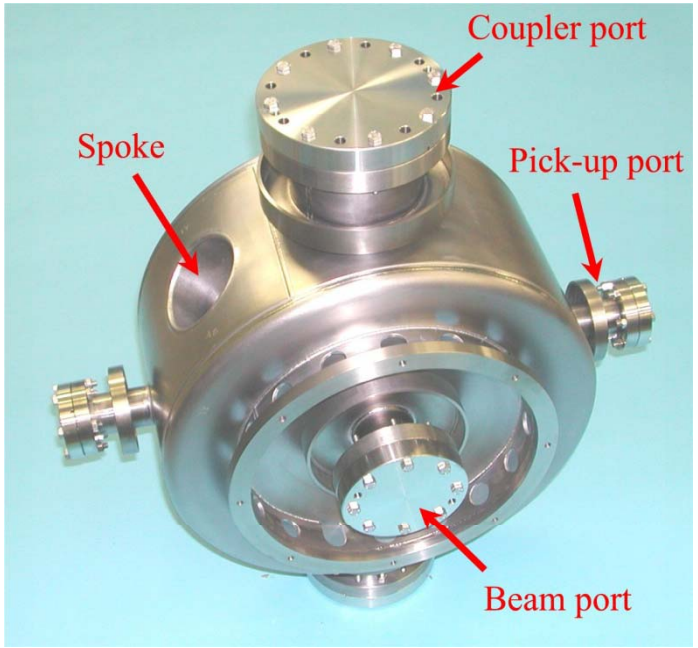


Cell diameter : 39.2 cm
Cavity length : 20 cm
Beam aperture : 5 cm

Manufactured by Zanon, Italy

$E_{pk}/E_{acc}$ : 2.82
$B_{pk}/E_{acc}$ : 7.4 mT/MV/m

**These numbers are well optimized.**

# The two cavities EZ01 and EZ02 achieved $E_{acc}$ = 13.5 MV/m and 13.0 MV/m, exceeding the AAA goal of 7.5 MV/m

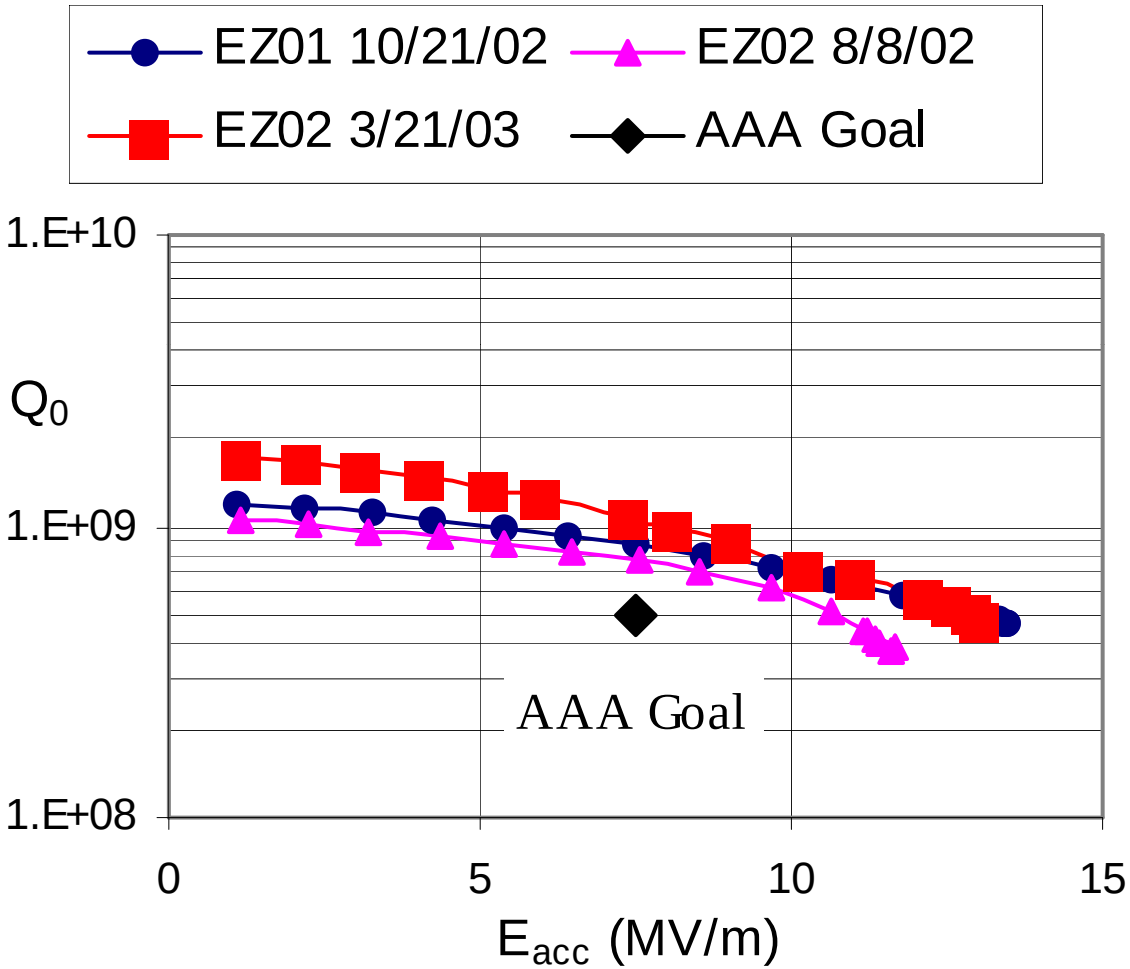


Repeated cleaning of EZ02 improved the performance (red square).

Presently, $E_{acc}$ = 13.5 MV/m is the world record.

Published in CERN COURIER Vol. 43 (1) p. 8 Jan/Feb 2003

# A 103-mm (OD) power coupler has been designed for up to 100 mA beam (212 kW)

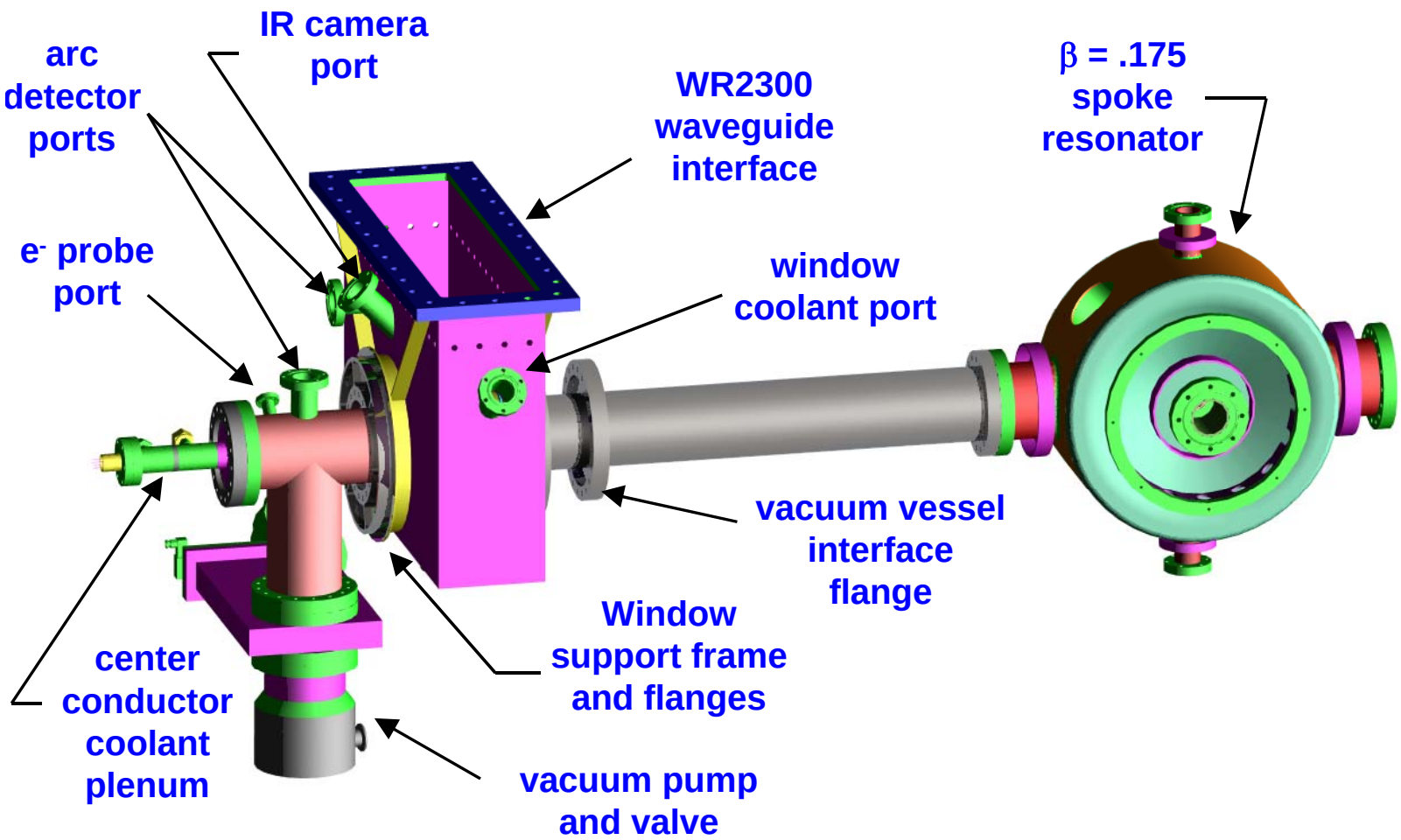

# A cryomodule and a cryosystem have been designed

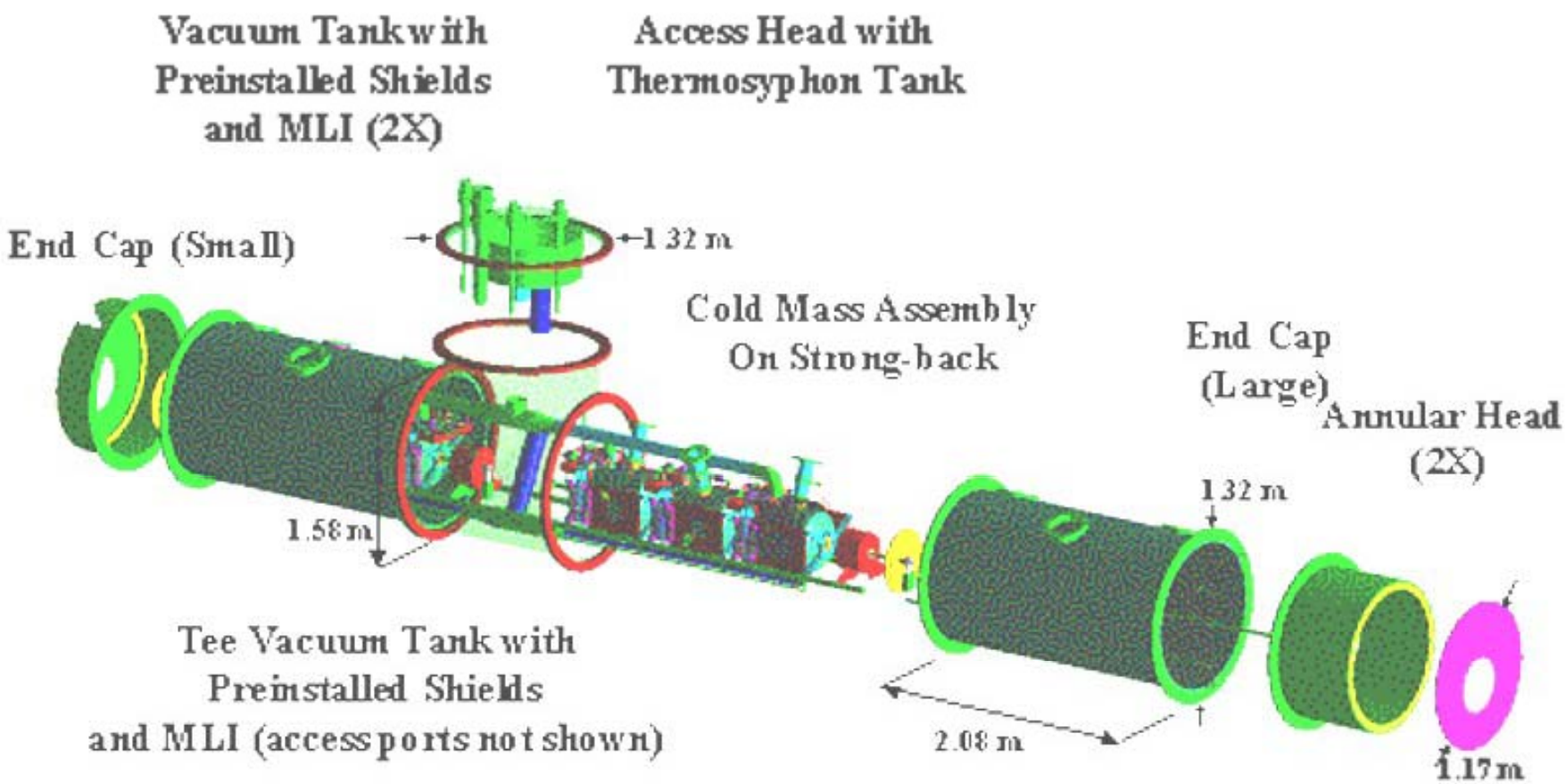


J. P. Kelley et al., CEC/ICMC 2001

# Other R&D Activities

- **Study on the effect of hydrogen Q disease.**
  - **APT and AAA cavities have not been baked at >150 °C.**
  - **Whether baking at >600 °C is necessary or not will change the cost estimate for cavity fabrication**
- **Study on $MgB_2$ for SRF applications.**
  - **Magnesium diboride ($MgB_2$, Tc=39K) has been studied at the Superconductivity Technology Center (STC) at LANL in collaboration with UCSD.**

    **=> Talk of Alp Findikoglu.**
  - **Published data have shown a RF surface resistance comparable to Nb so far. With better optimization of fabrication method, $R_s$ may get lower than Nb.**
  - **It has been pronounced that this material does not have intergranular weak links that have prevented high-Tc materials such as YBCO from being applied to SC cavities.**

# Higher-Tc superconductors, e.g., $Nb_3Sn$ and $MgB_2$ , need to be developed to further reduce the construction and operational costs of future accelerators

**Superconductivity parameters for Nb, $Nb_3Sn$, and $MgB_2$.**

| Material | $T_c$ [K] | GL Param $\kappa_{GL}$ | $H_c$ [Oe] | $H_{c1}$ [Oe] | $H_{c2}$ [Oe] | $H_{sh}$ [Oe] |
|---|---|---|---|---|---|---|
| Nb (0 K) | 9.2 | 0.78 | 2000 | 1700 | 2400 | 2400 |
| $Nb_3Sn$ (0 K) | 18.2 | 22.8 | 5350 | 520 | 173000 | 4010 |
| $MgB_2$ (4 K) | 39 | 36.3 | 4290 | 300 | 220000 | 3210 |
| $MgB_2$ (20 K) | 39 | 25.4 | 2780 | 250 | 100000 | 2090 |

**This limits the cavity field.**

$T_c$ : Transition temperature

$\kappa_{GL}$ : (penetration depth)/ (coherence length)

$H_c$ : Thermodynamic critical magnetic field, this limits the dc field of Type I superconductors.

$H_{c1}$ : For type II superconductors, above this value, some magnetic flux enters, but still superconduting.

$H_{c2}$ : For type II superconductors, the superconductor becomes normal conducting at this value.

$H_{sh}$ : Superheating critical magnetic field, for the RF case, this limits the maximum field since the flux nucleation time ($\mu$s) is long compared to RF cycle (ns).

# Theoretical limit on $E_{acc}$, assuming $B_{pk}/E_{acc}$= 4 (mT/MV/m)

| Material | Operation temp (K) | Theoretical limit $E_{acc}$ (MV/m) |
|---|---|---|
| Nb | 4 | 49 |
| $Nb_3Sn$ | 4 | 95 |
| $MgB_2$ | 4 | 80 |
| $MgB_2$ | 20 | 52 |

- **Both $Nb_3Sn$ and $MgB_2$ have a potential of exceeding the Nb limit.**
- **Both $Nb_3Sn$ and $MgB_2$ have a potential of operating at higher temperatures, or operating at 4 K with less loss.**
- **These features will lead to further cost reduction of future accelerators.**

# A 1.5 GHz single-cell $Nb_3Sn$ cavity has been tested at JLAB and has already shown attractive features.

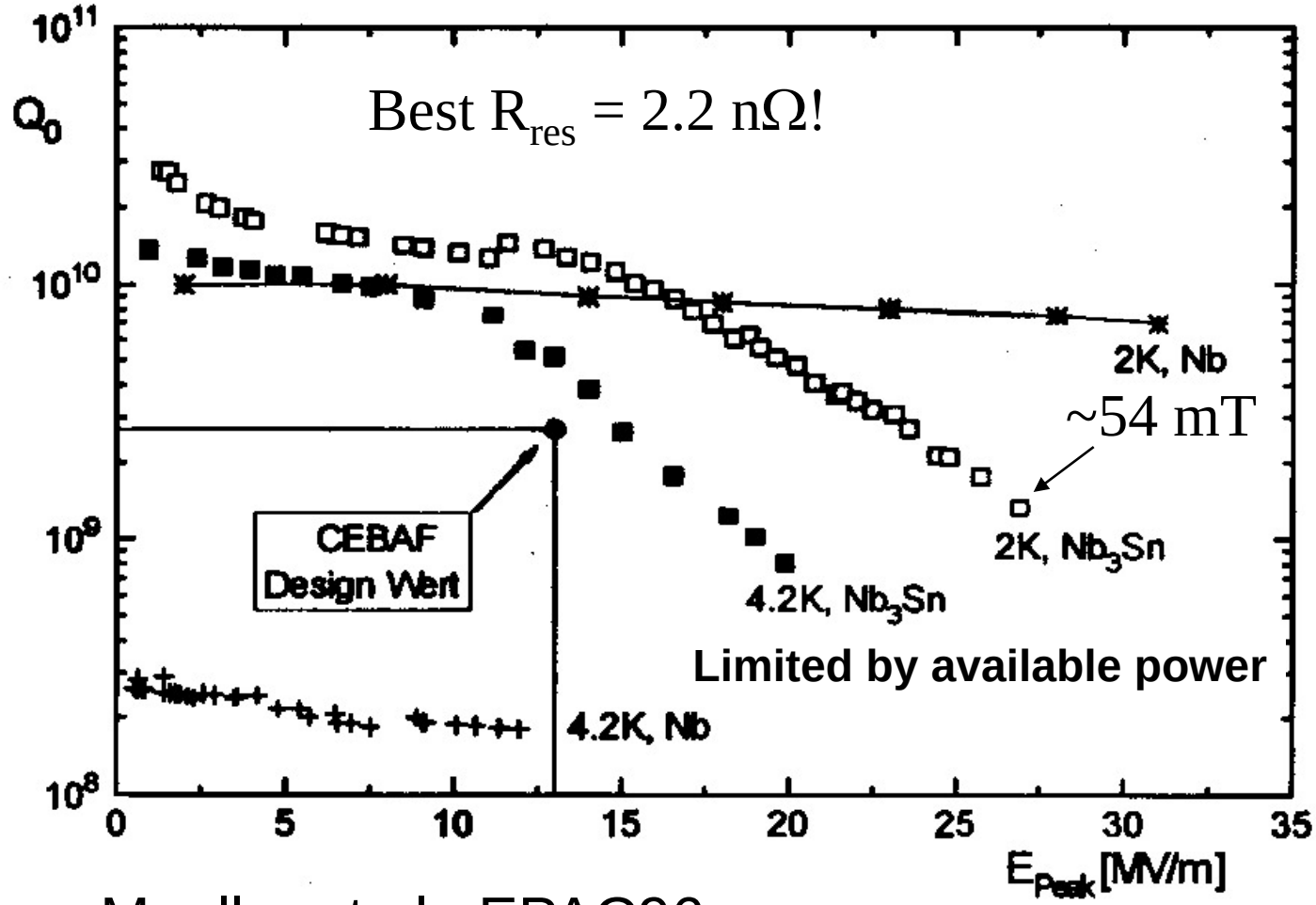


Mueller et al., EPAC96.

- The cavity can be operated at 4 K instead of 2 K, which leads to a large cost reduction in refrigerators.
- Need to improve Q slope by improving the coating method, surface treatment, etc.

## Magnesium diboride ($MgB_2$) has been available for many years, but it was discovered to be superconducting ($T_c$=39K) in 2001.

- **This material is likely to be relatively inexpensive and readily available as powder.**
- **Also, a dense material can be fabricated by HIP at 200 MPa and 1000 °C, a condition currently available in industry.**

**Figure 7.** Examples of machined samples from HIPed magnesium diboride. Notice mirror like quality of polished sample on left and third from left. Three small parallelepipeds with sharp corners were machined for high accuracy RUS measurements of elastic constants.

Vitali Nesterenko (UCSD), Invited Talk at the 11th International Symposium on Processing and Fabrication of Advanced Materials Oct. 7-10, Columbus, Ohio.

# An idea has been developed to make a bulk $MgB_2$ layer inside a copper cavity (1)

**$MgB_2$ powder inserted between two copper pipes, sealed, and placed in vacuum between two half dies to produce $MgB_2$-copper composite in shape of a cavity.**

***T. Tajima, LANL, EPAC 2002.***

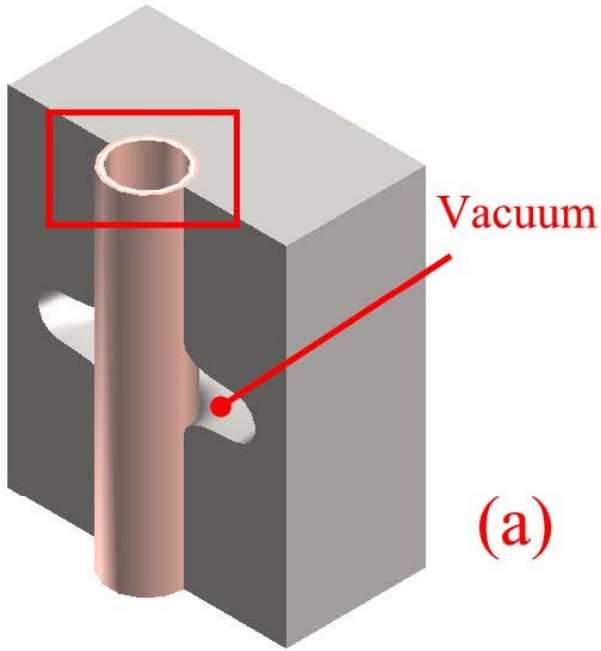


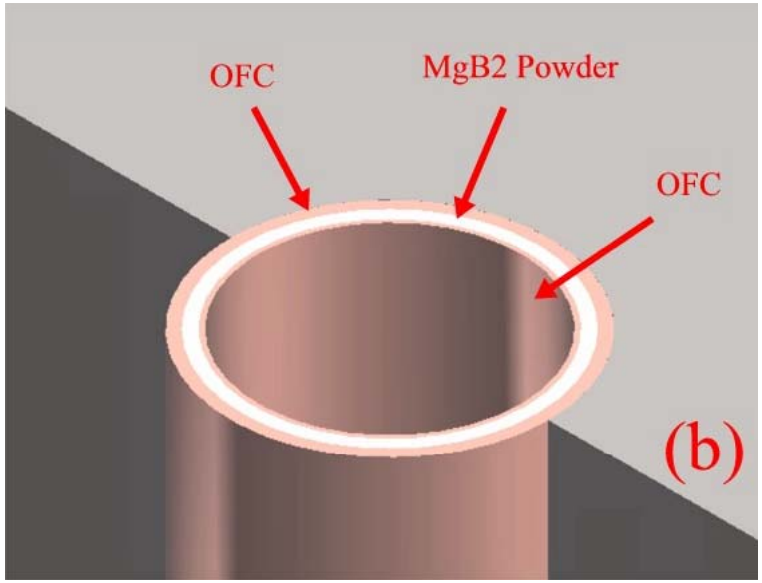

# An idea has been developed to make a bulk $MgB_2$ layer inside the copper cavity (2)

**Hot Isostatic Press technique at 200 MPa and 1000° C has already been used to form bulk $MgB_2$ material. Picture shows formed cavity with the two dies.**

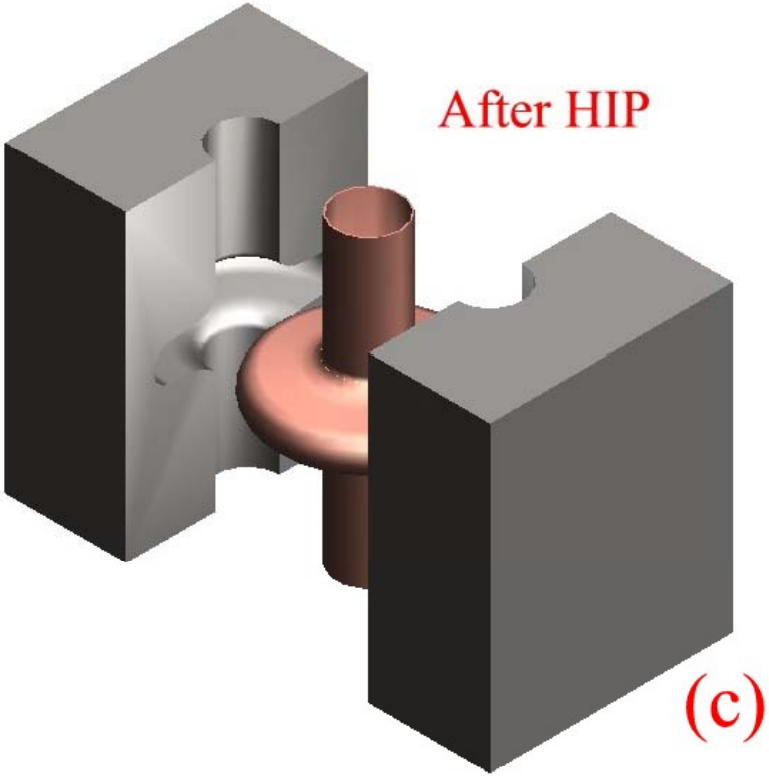


**Chemically dissolve the inner copper layer.**

# Future Plans after funding started (1)
# (subject to change depending on surrounding situations)

- **Spoke cavities**
  - **Year 1: Procure power couplers for the spoke cavity and test them at room temperature**
  - **Year 2: Design, procure a cryostat and prepare for beam tests at LEDA**
  - **Year 3: Assemble a cavity with a power coupler in the cryostat, install it at the LEDA output and perform beam tests up to 100 mA.**
- **Elliptical Cavities**
  - **Year 1: Identify the source of gradient limitation**
  - **Year 2-3: Develop/learn methodology to improve the gradient to reach ~ 80 % of theoretical limit.**
  - **Year 4-: Prototyping of cavities for practical use, e.g., XADS, LANSCE upgrade, etc.**

# Future Plans after funding started (2)
# (subject to change depending on surrounding situations)

- **Higher-Tc cavities**
  - **$Nb_3Sn$**
    - » **Year 1-2: Re-establish the technique developed until 1996 and form a uniform layer on a small (~3 GHz) single-cell cavity and measure Q-E curves.**
    - » **Year 3-4: Develop techniques to make a uniform layer on large-size and multi-cell cavities and spoke cavities**
    - » **Year 5-6: Assemble a practical-size $Nb_3Sn$ cavity in a cryostat and beam test it somewhere**
  - **$MgB_2$ and other materials**
    - » **Year 1: Make small bulk samples with HIP or coated on Cu by pulsed-laser deposition, and measure RF surface resistance (Rs) and its power dependence.**
    - » **Year 2-3: Improve Rs such that it shows lower Rs than Nb at higher temperatures.**
    - » **Year 4-5: Develop methods to fabricate a real cavity in a cost competitive way**

# Summary

- An excellent infrastructure for handling and testing the SC cavities has been built in LANSCE at LANL.
- Through the successful results of the APT elliptical cavities and AAA spoke cavities, our integrated capability of design, procurement, surface treatment, handling and testing of the SC cavities has been demonstrated.
- We have maintained the acquired skills and expertise this year despite funding shortfalls. We hope to obtain funding from the Advanced Fuel Cycle (AFC) and/or International Fusion Material Irradiation Facility (IFMIF) programs in the future.
- We are planning to explore the possibilities of alternative materials such as $Nb_3Sn$ and $MgB_2$ for better performance than niobium for further cost reduction of future accelerators.
- We have been collaborating with ANL, CEA/Saclay, CNRS/Orsay, Cornell, JLAB, INFN/Milano,,,.