# The Ladder Spoke Resonator at INFN-Legnaro

*V. Andreev, **G. Bisoffi**, A.Pisent,*
*E. Bissiato, M.Comunian, E. Fagotti*
**INFN – LNL**
*T. Shirai*
**ICR, Kyoto University**

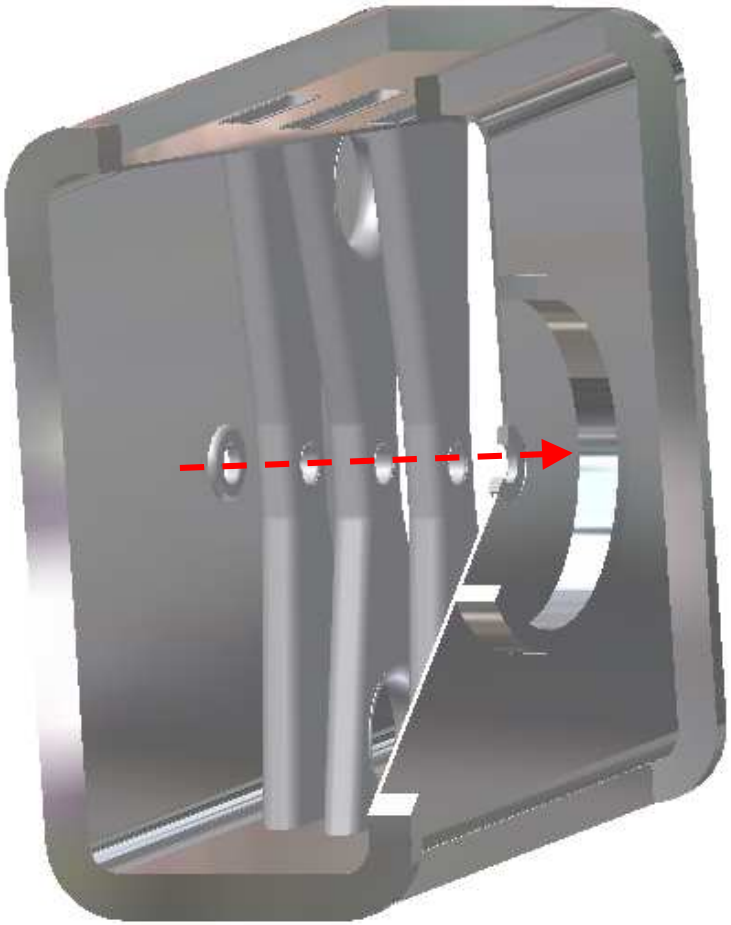

An easily accessible SC resonator
for a **5 mA proton accelerator**
352 MHz, 4 gaps, $\beta_0$ = 0.12 & 0.17,
5÷20 MeV range

**Framework**
Linac design
$E_z$ flatness = B-field = Large flanged joints
= RF Coupling = f-tuning
Outlook

# Framework: β = 0.1÷0.2 SC cavities for 5 mA p linac

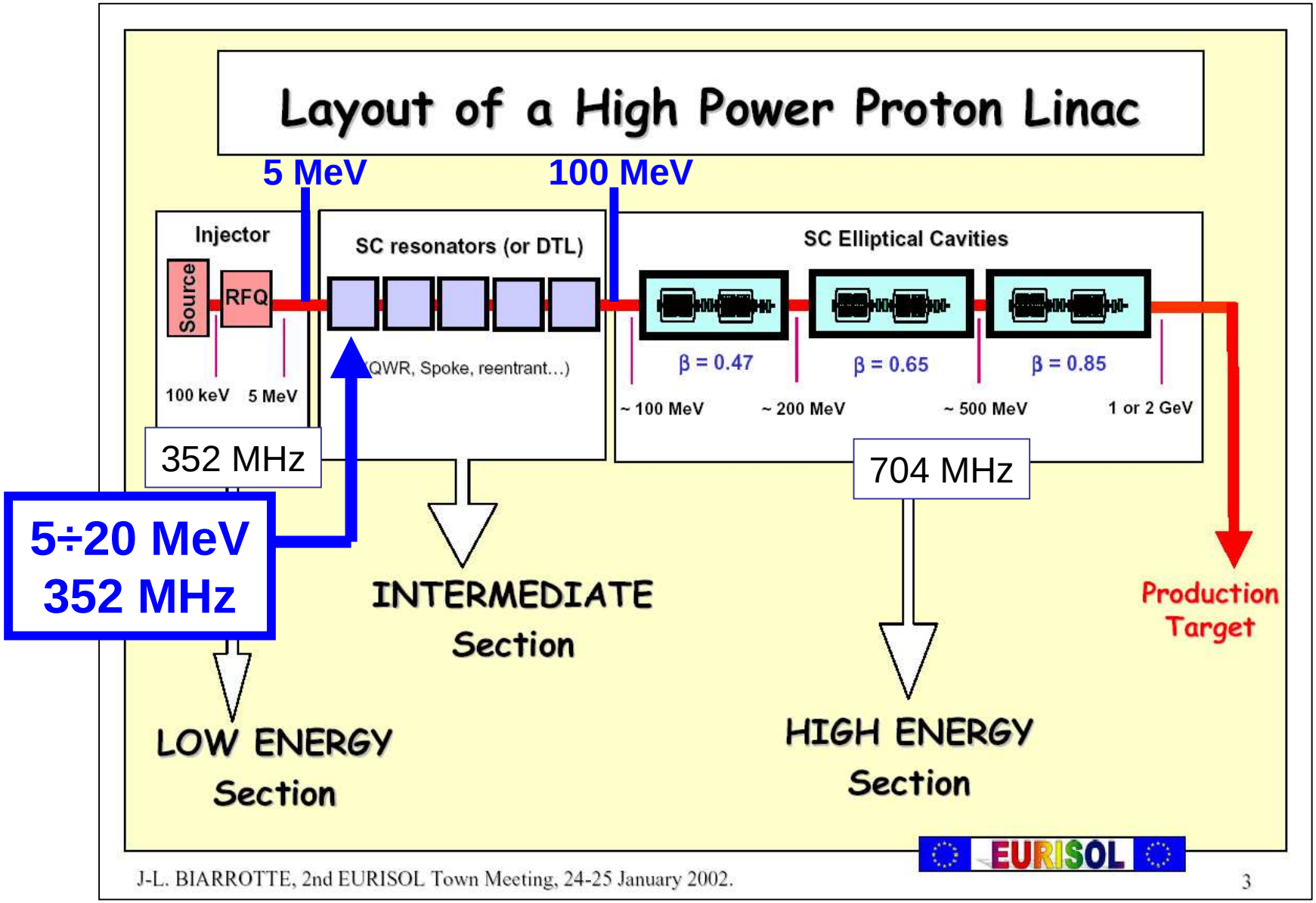

# 5 mA p superconducting linacs for RIBs production (but also ADS demonstrators..)

**DRIVER ACCELERATOR for EURISOL**

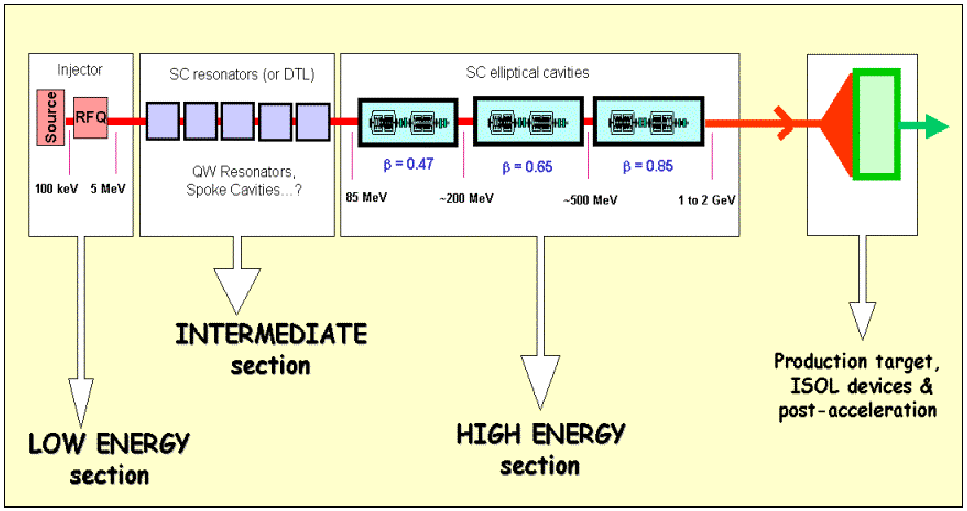


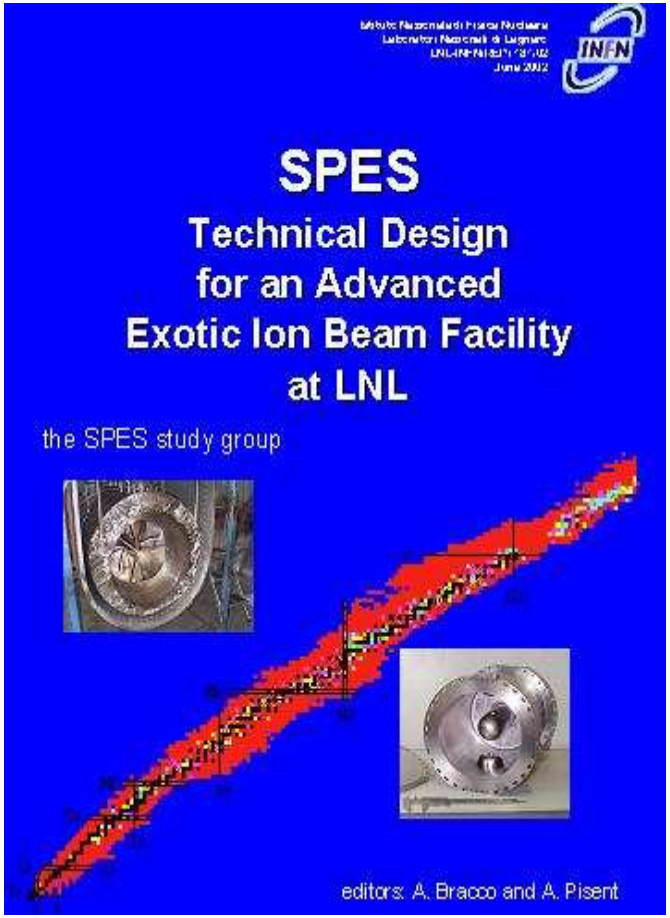

# 5 mA superconducting linac (SPES-EURISOL)

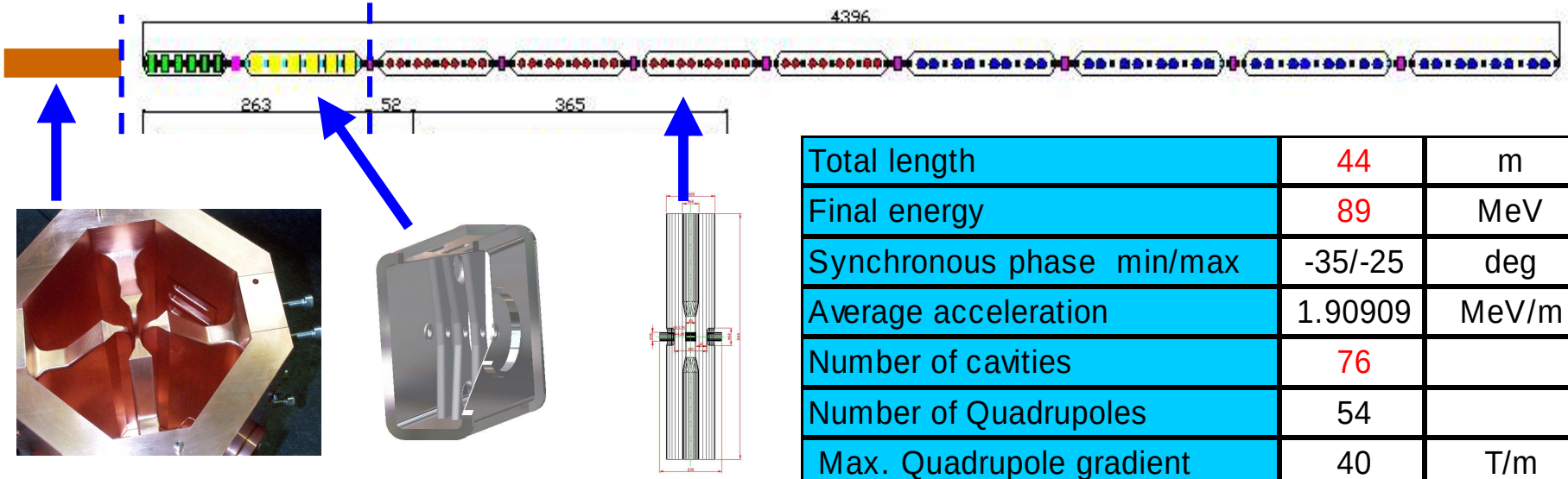








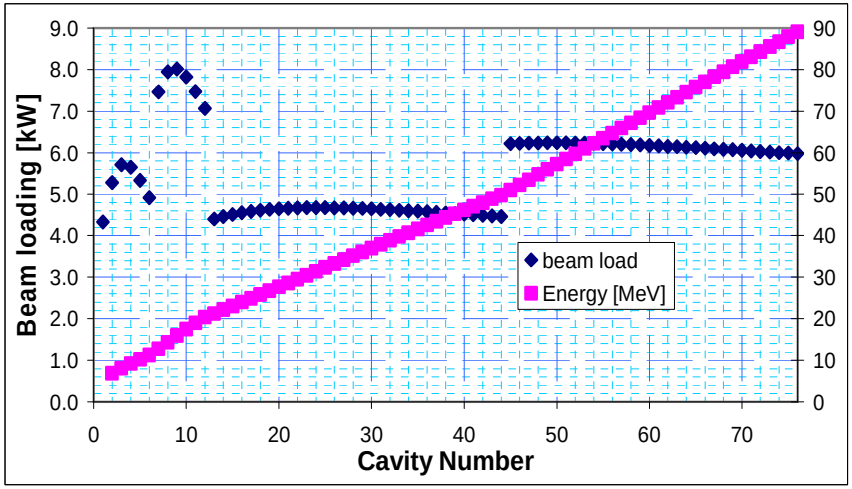


| | | |
|---|---|---|
| Total length | 44 | m |
| Final energy | 89 | MeV |
| Synchronous phase min/max | -35/-25 | deg |
| Average acceleration | 1.90909 | MeV/m |
| Number of cavities | 76 | |
| Number of Quadrupoles | 54 | |
| Max. Quadrupole gradient | 40 | T/m |
| Quad aperture/length | 2/5 | cm |
| Current limit (losses<10-5) | >50 | mA |
| RF dissipation | 760 | W(@4.5K) |
| Beam loading | 420 | kW |
| RF sys. pwr. cons. ($h_{RF}$=50%) | 840 | kW |
| Static cryo. losses (10 W/m) | 440 | W |
| Cryo. sys. cons. ($h_{cryo}$=1/500) | 600 | kW |
| Mains power | 1440 | kW |

# Beam Envelopes with the 5 mA p beam

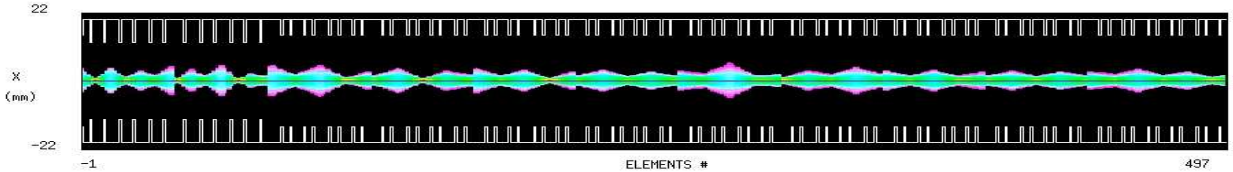


$\varepsilon_{T,in}$(norm) = 0.2 mm mrad, $\varepsilon_{L,in}$ = 0.2 MeV deg

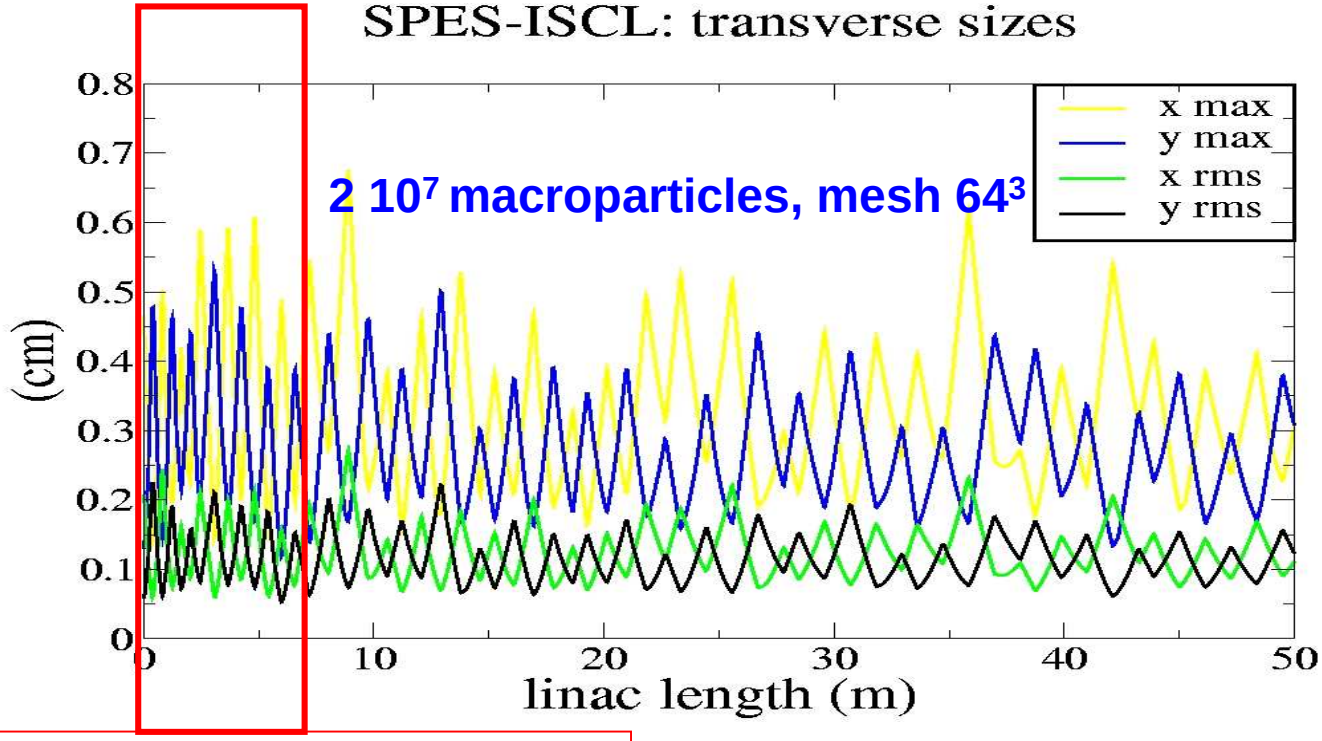


(Section with **12 ladder resonators**
**5÷20 MeV**, Length = **7 m**)

# Twelve 4-gap Resonators in 2 Cryostats

**Beam bore Ø**:
**40 mm** (quadrupoles)
**25 mm** (cavities)

Needed $\mathbf{E_a = 5.8\ MV/m}$, $\phi_{s,av} = -30^o$, $\mathbf{L_{eff} = 2\beta_0\lambda}$

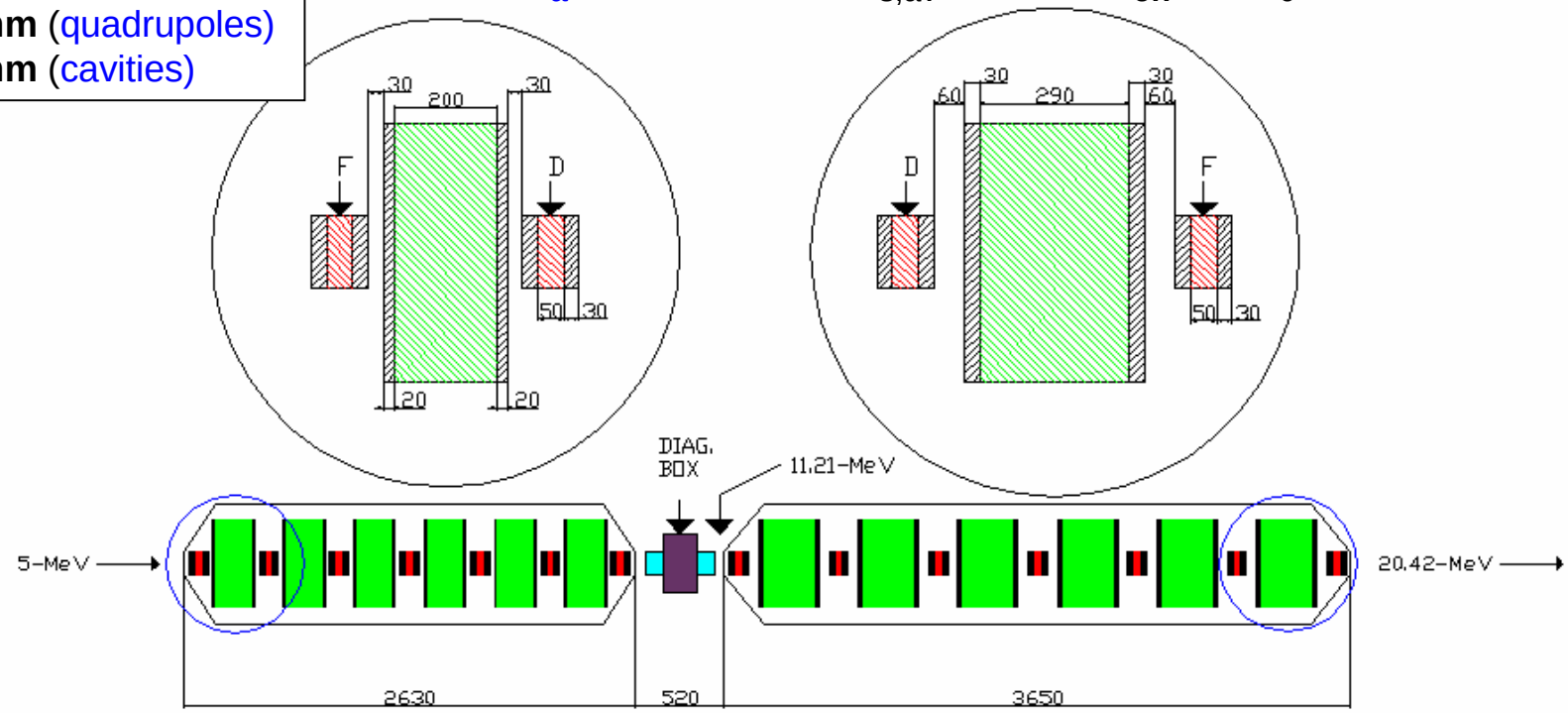


$\beta_0 = 0.12$

$\beta_0 = 0.17$

**Strong transverse focusing** in the first cells (97º per FODO)
to avoid the fast exponential growth of the **parametric resonance**

# The focusing element: a superferric quadrupole

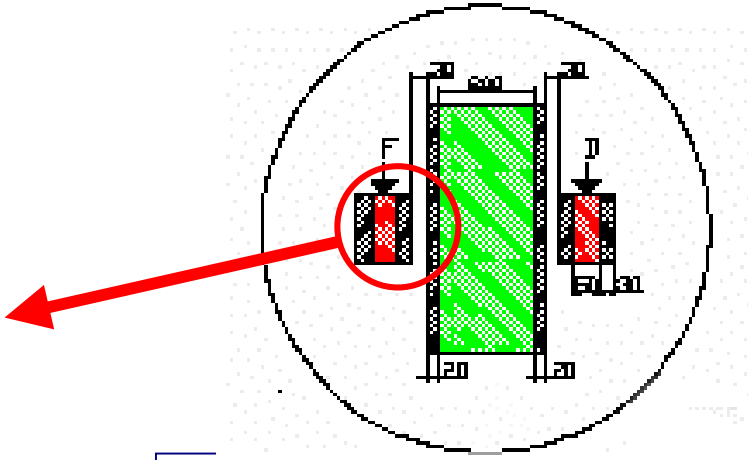

**A Superferric Quadrupole for use in an SRF Cryomodule,** F. Zeller[1], J. C. DeKamp[1], A. Facco[2], T. L. Grimm[1], J. Kim[1], and R. Zink[1]
[1] ***NSCL-MSU*** [2] ***INFN - LNL.***

**Properties**

Effective length 50 mm
Radius 20 mm
Gradient 31 T/m
Current (2-D calculation) 63 A
$H_q$ field in the resonator < 0.05 mT

**Why quadrupoles?** **Homogeneous** to preceding RFQ and following linac scheme
With respect to QP-doublet and Solenoid, easier matching with the RFQ

# The 4-gap Ladder Resonator

$L_{int}$ = 200 mm

450 mm

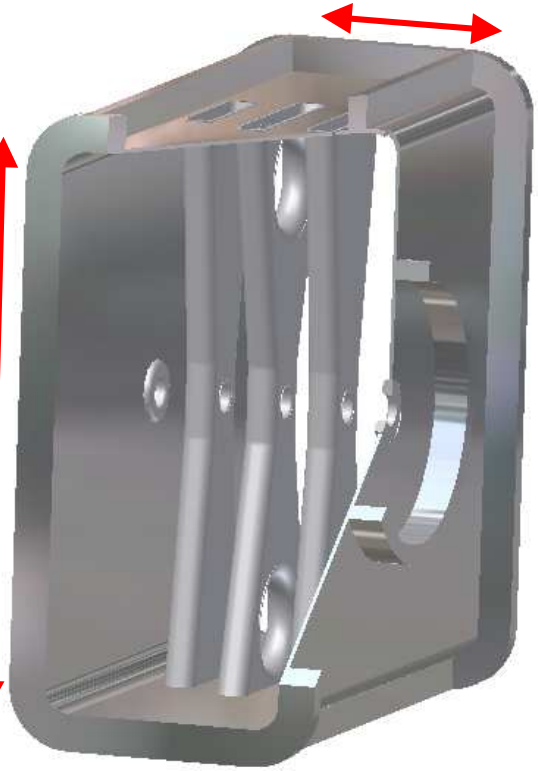

Huge flanged ports for:

- Inspections
- Repair (grinding and EBW)
- BCP and rinsing

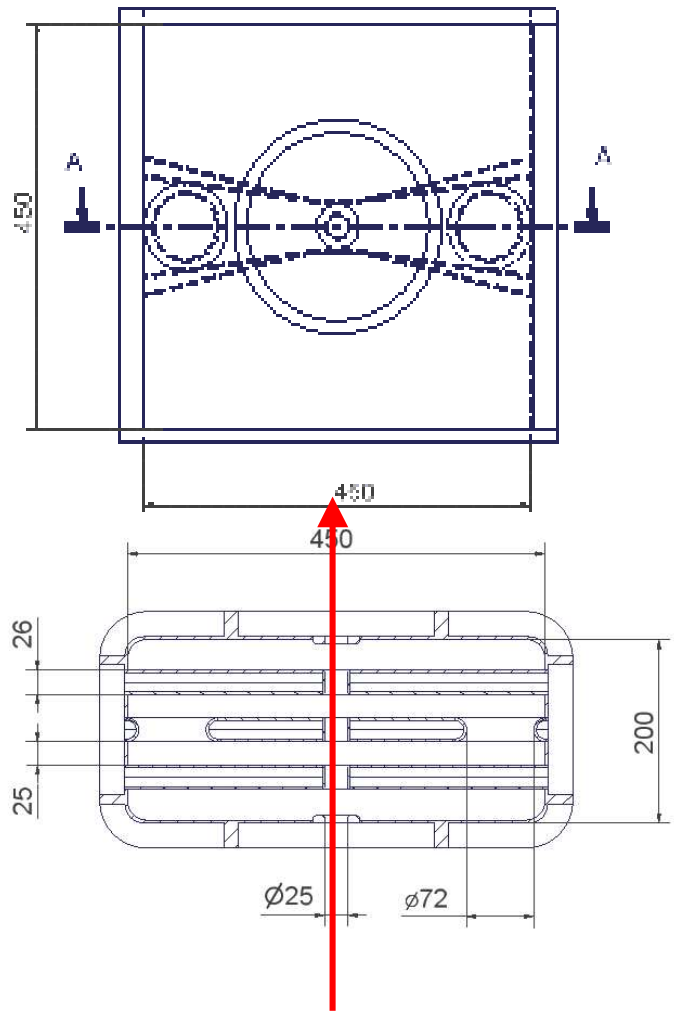


Three stems (four gaps)
Stems have a racetrack cross-section

- from 65 mm to 125 mm (1st and 3rd)
- from 65 mm to 166 mm (2nd), with two 72 mmØ coupling holes

Beam bore 25 mm, Gap length 25 mm

# Ladder Resonator ($\beta_0$=0.12): rf parameters

| | |
|---|---|
| Frequency | 352 MHz |
| Accelerating field flatness (between central and end cells) | 100 % |
| $B_{s,p}$ | 65 mT (set as limit) @ the coupling hole |
| B at the flanged joint | 1.5 mT |
| $E_{s,p}$ | 20 MV/m |
| Energy gain at $\beta_0$ = 0.12 | 1.15 MeV/q |
| Accelerating Field $E_0$ | 5.8 MV/m |
| Beam Loading | 4.2÷5.8 kW |
| $U/E_a^2$ | 59 mJ/(MV/m)$^2$ |
| Rf coupling (coupling holes) | 1.2 % |
| Q - @ 4 K (assumed) | $5 \times 10^8$ |
| Geometrical factor G ($\Omega$) | 45 $\Omega$ |
| $B_{s,p}/E_0T$ | 11.2 mT/MV/m |
| $P_{diss}$ (@ Q = $5 \times 10^8$) | 10 W |

# Field Uniformity on Beam Axis = 100%

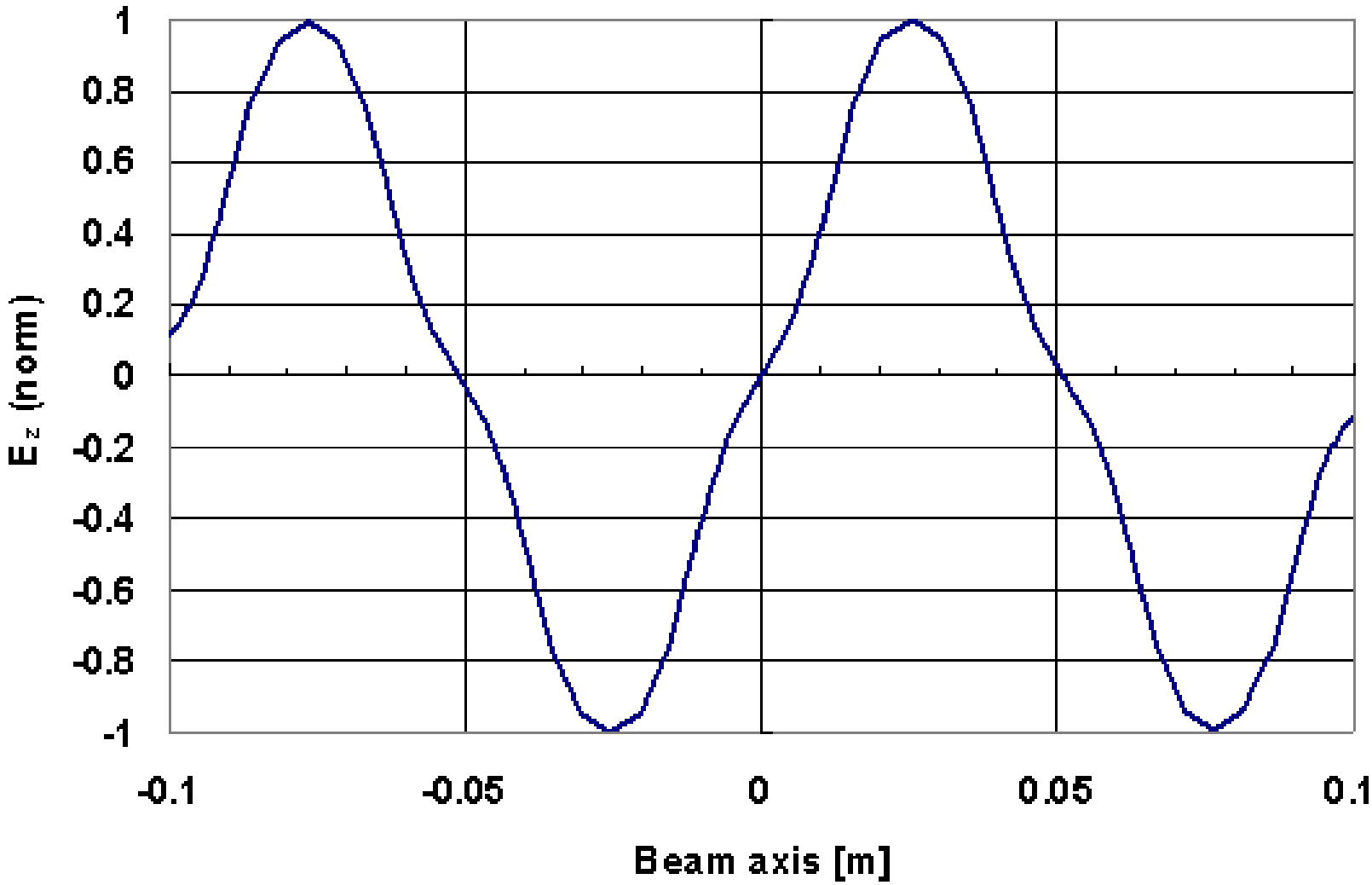

# $\beta_0$ = 0.12 Ladder: TTF curve

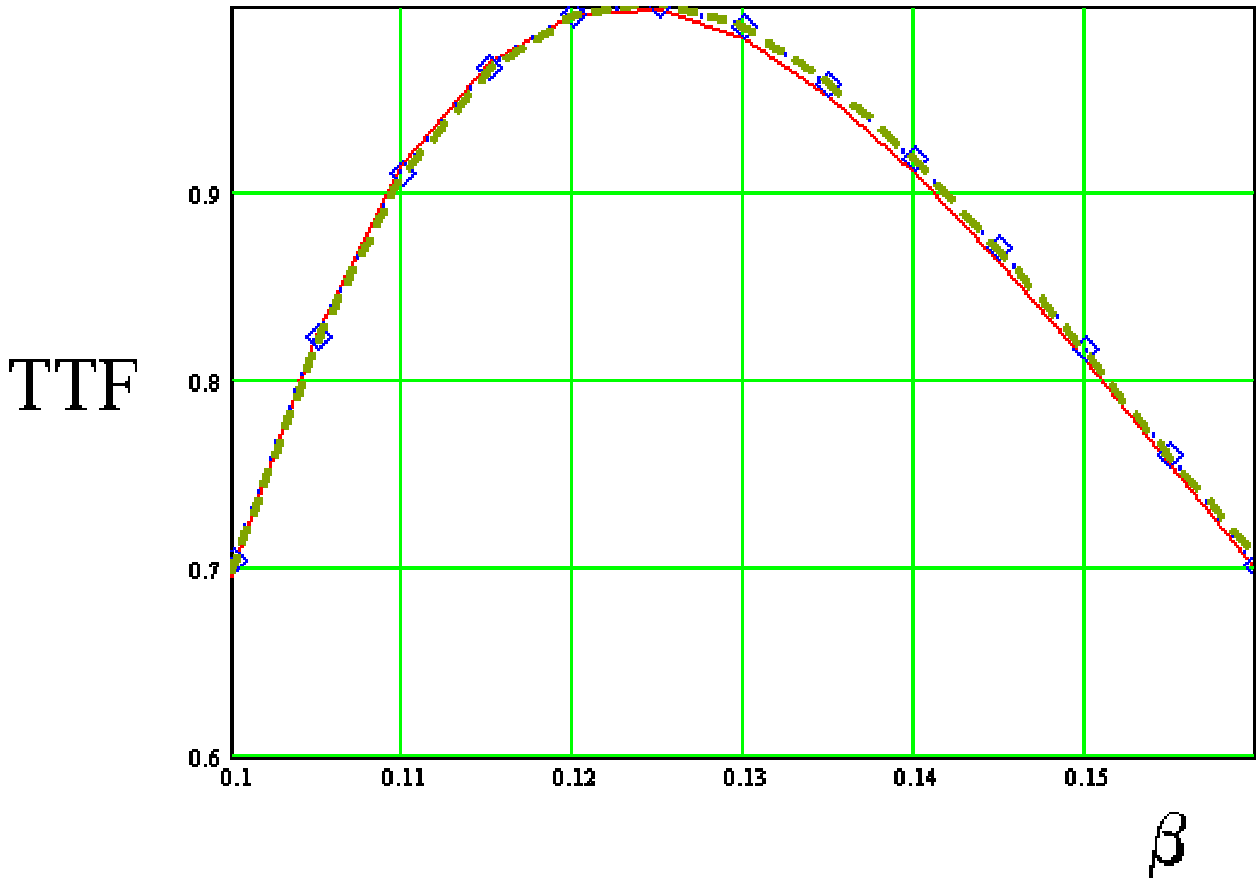


TTF curve of the ladder resonator (blue diamonds),
plotted together with the polynomial approximation (eq. (1), green dash curve)
and the 4-thin-gap approximation (eq (2), red solid curve).

# Distribution of Surface Magnetic Field

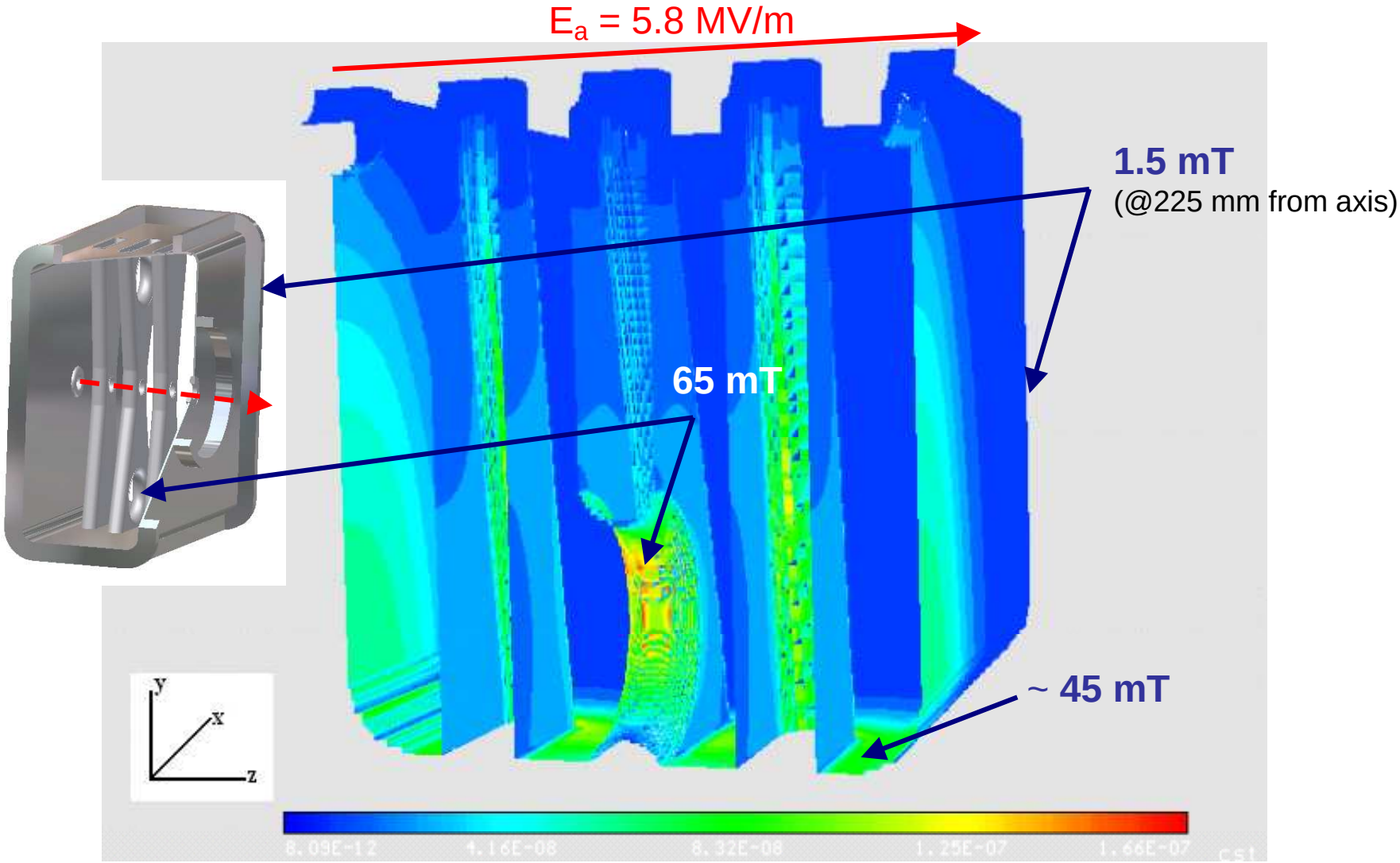

# SC Joint on SC-RFQ at INFN-LNL

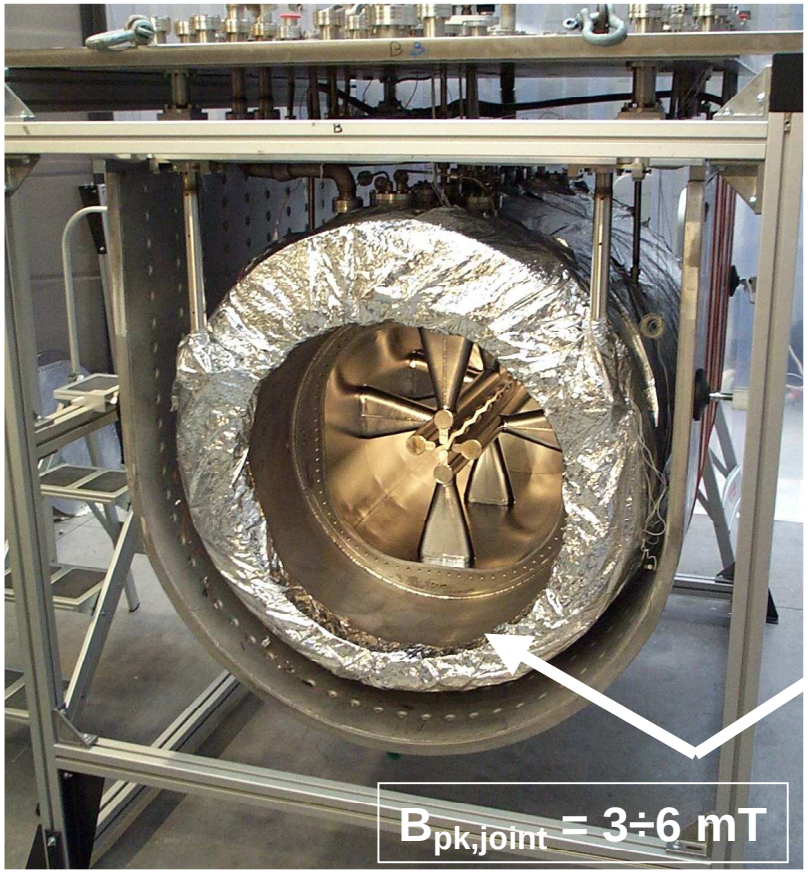


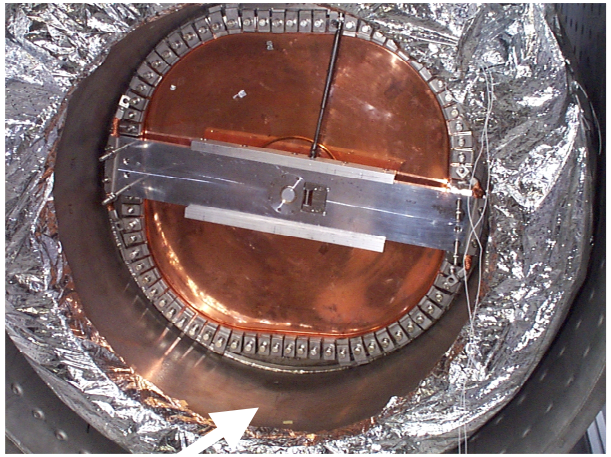

Nb/Cu sputtered end-plate (no gasket, just pressure – **see also** **K.W. Shepard, IEEE Trans. on Nucl. Sci., NS-24, N.3, June 1977, 1147**

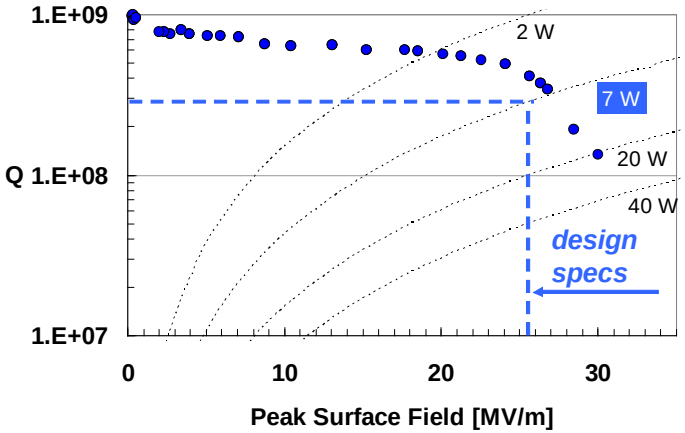

# RF Coupling

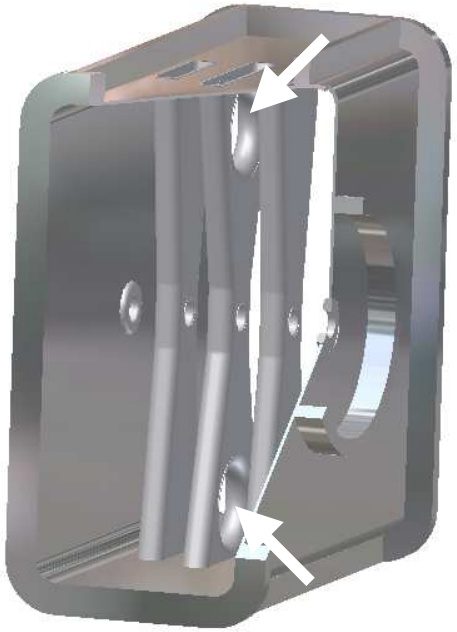

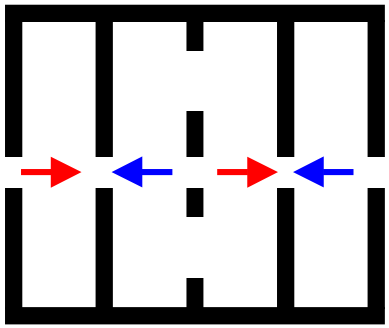

$f_0$ = 352 MHz (w.m.)

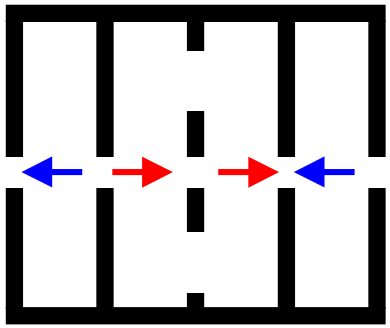

$f_1$ = 356.3 MHz

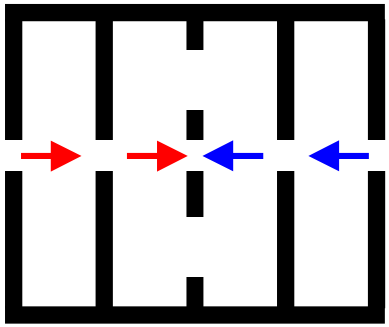

$f_2$ = 357.2 MHz

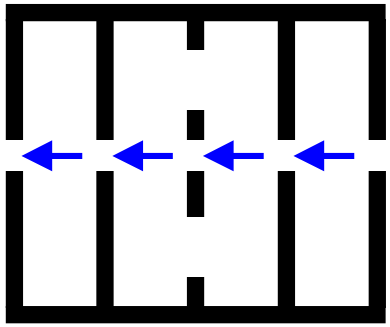

$f_3$ = 449.1 MHz

**Without coulping holes**:
Gap length very small vs. stem width ➔ mode degen.
**With holes**: 1.2 % coupling
Positioning error of one stem by 0.1 mm in z ➔
1% deviation in $E_z$ flatness
(and mode separation +1.5%)

# Frequency Tuning

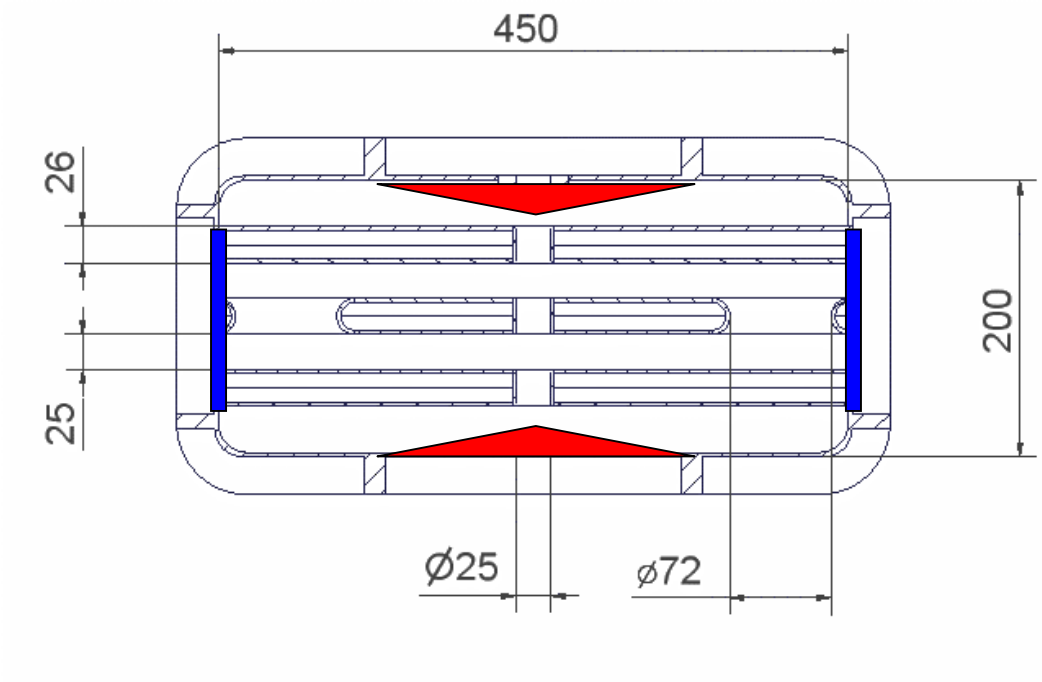


**Rough Tuning** (**during construction**): stepwise reduction of stem length (both sides)
+1.33 MHz/mm

**Fine Tuning** (**in operation**): end-plate deformation (both sides)
-1.08 MHz/ (0.1mm)

# Outlook

- **Compact acceleration** of a **5 mA** p beam (12 cavities, 2 cryostats, 7 m): **5÷20 MeV ($\beta$ = 0.1÷0.2)**
- The Ladder scheme allows **ample access** for **inspection, repairs and treatments** while retaining **good rf properties**

  **(100% field flatness, $E_{pk}$=20 MV/m, $H_{pk}$ = 65 mT, $E_a$ = 5.8 MV/m)**
- Mode degeneration is overcome by **rf coupling holes** in the central stem
- **Next steps**: **mechanical analysis**, EBW and **construction tests**, definition of **tuners** and **rf ports**, design of the **liquid He dewar**

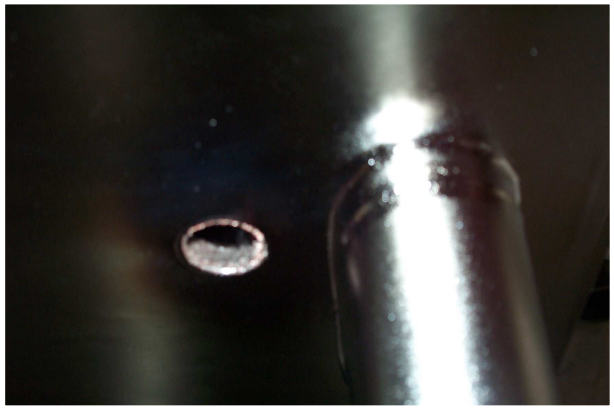

- Plasma discharge: sputtering of Cu and INOX layer in a high-j region
- Chemical Polishing would have taken months
- **No CP**, 3M – Scotch Brite **lapping followed by HPWR** (2 weeks)

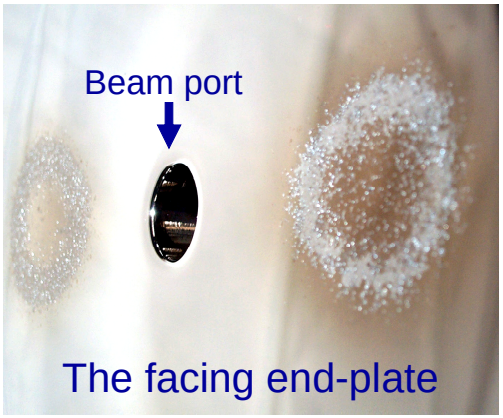


- **CP** again **avoided**
- 3M – Imperial, **with $Al_2O_3$ abrasive (60 to 2 μm)**
- **HPWR**

# Evolution of SRFQ2 Performance

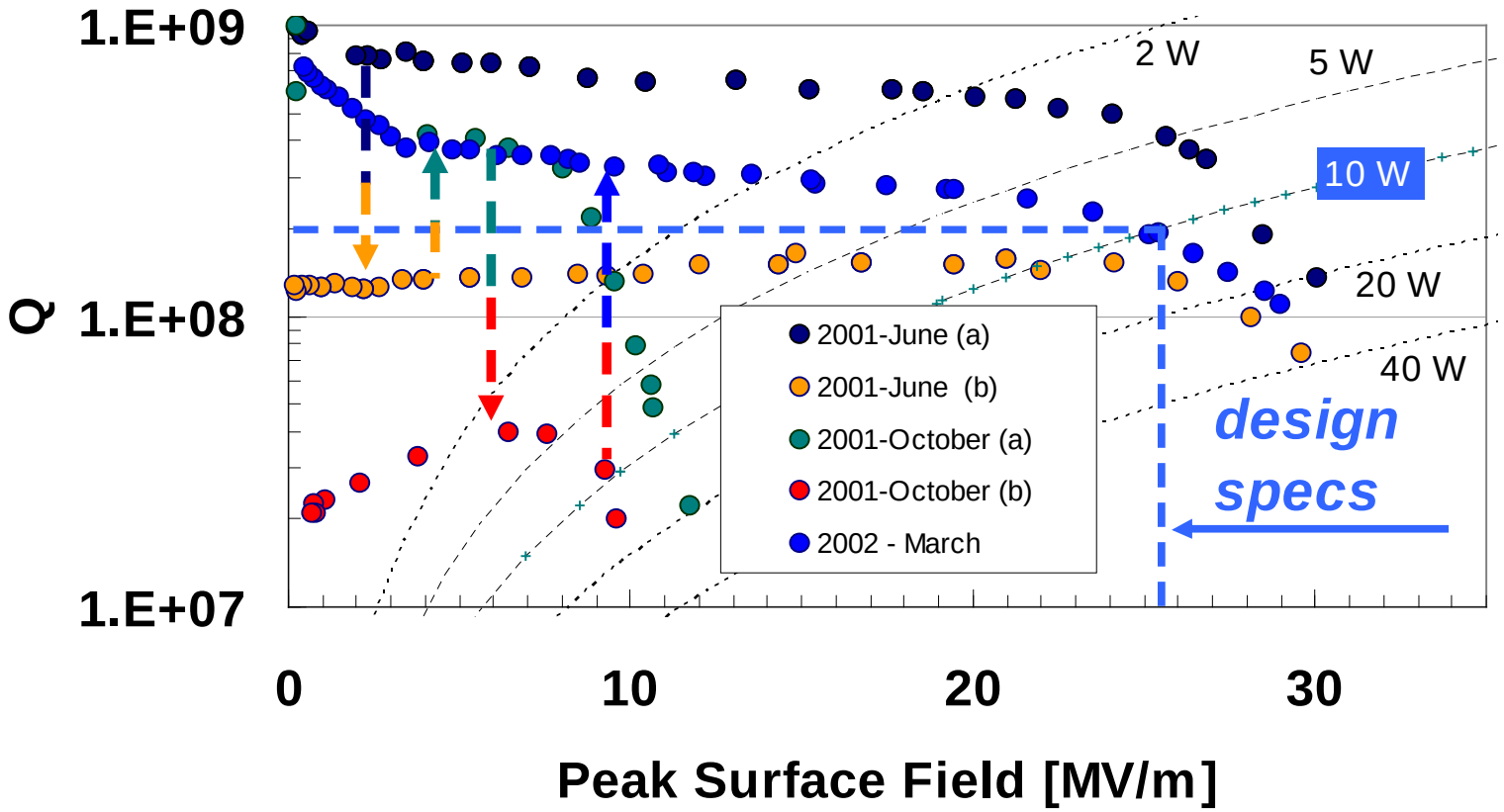

# Superconducting cavities

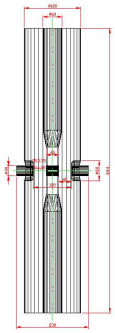

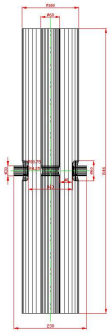

| Cavity type | 4-gap | 4-gap | HWR | HWR | units |
|---|---|---|---|---|---|
| $\beta_0$ | 0.124 | 0.17 | 0.25 | 0.33 | |
| n. of gap | 4 | 4 | 2 | 2 | |
| **$E_p$/ $E_a$** | **~3.** | **~3.** | **~4** | **~4** | |
| **$H_p/E_a$** | **102** | **100** | **95** | **106** | **Gauss/(MV/m)** |
| $R_s \times Q$ | 45 | 62 | 54 | 66 | Ω |
| Eff. length | 0.2 | 0.29 | 0.18 | 0.214 | m |
| Bore diameter | 25 | 25 | 30 | 30 | mm |
| Design $E_a$ | 6 | 6 | 6 | 6 | MV/m |
| **Design energy gain** | **1.2** | **1.74** | **1.08** | **1.284** | **MeV/q** |
| n. required | 6 | 6 | 32 | 32 | |

# Linac compactness at low β

**ΔW**: maximum acceleration/cavity is desired for economy reasons

**Parametric resonance** $\sigma_L = 2\sigma_T$ must be avoided (width: 0.4" $\sigma_T/\sigma_L$" 0.6)
$\sigma_T$ " $\pi/2$ (**envelope instability**)

Consequently: $\sigma_L = \sigma_T/0.4$ **$= \pi/0.8$**. But:

$$\sigma_L \approx L\sqrt{\frac{en\Delta W}{mc^2 L}\frac{2\pi\sin(-\phi_s)}{\beta^3\gamma^3\lambda}} \propto \sqrt{L}$$

(E average accelerating field, n number of cavities per period, β – γ relativistic parameters, λ rf wavelength)

Given cavity no. and energy gain, there is a limit on the period length **L**

A **compact lattice** is needed **for high performance cavities**

# Linac lattice

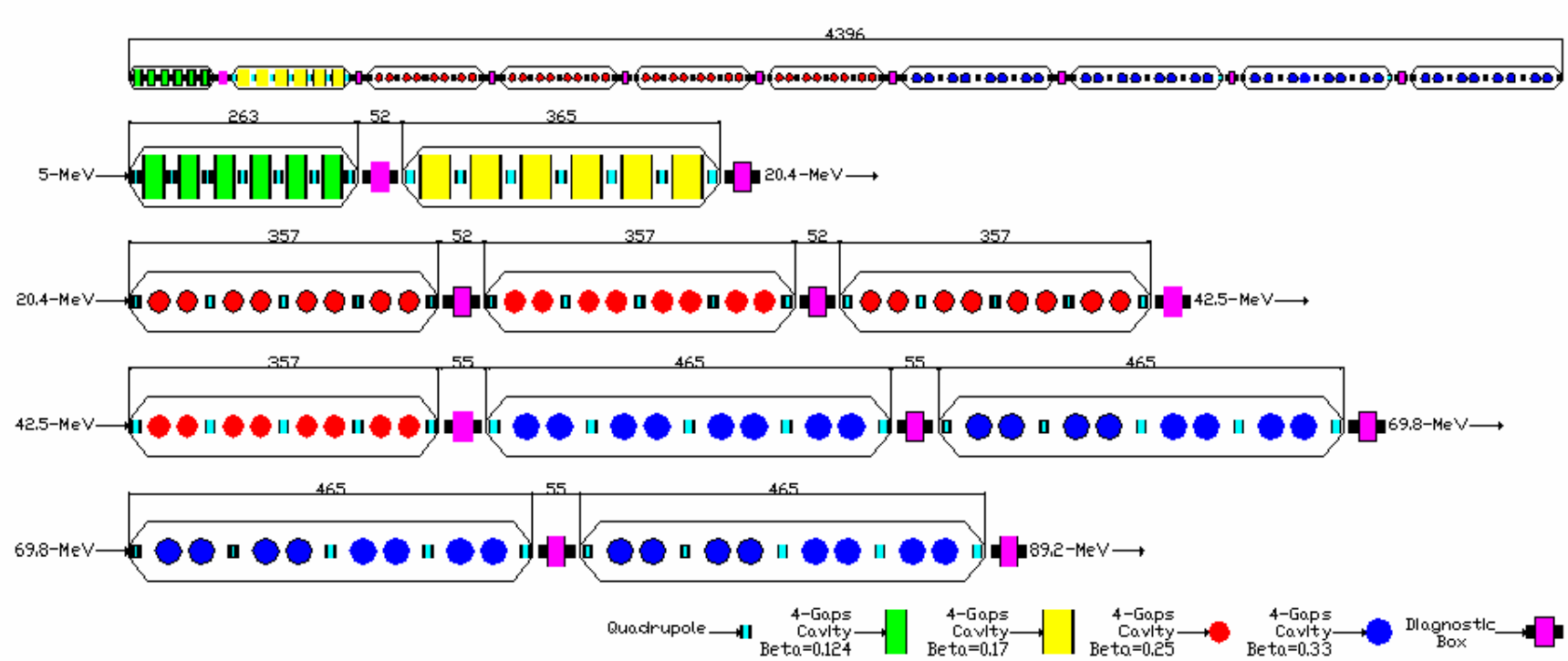


Figure 1 *Linac layout*

Length = 44 m, 10 cryostats, 76 resonators, $E_{fin}$ = 90 MeV

# Choice of the number of gaps in the desired beta range

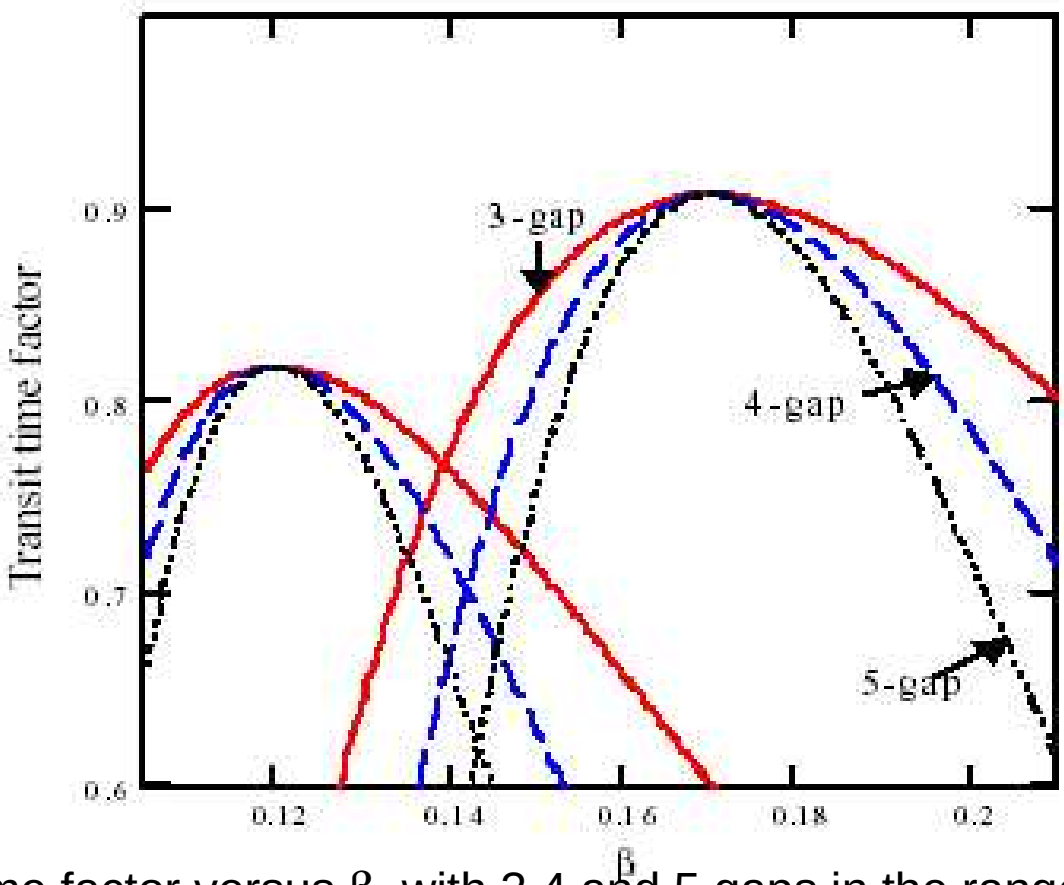


Transit time factor versus β, with 3,4 and 5 gaps in the range b = 0.1÷0.2

# TTF and Energy along the linac

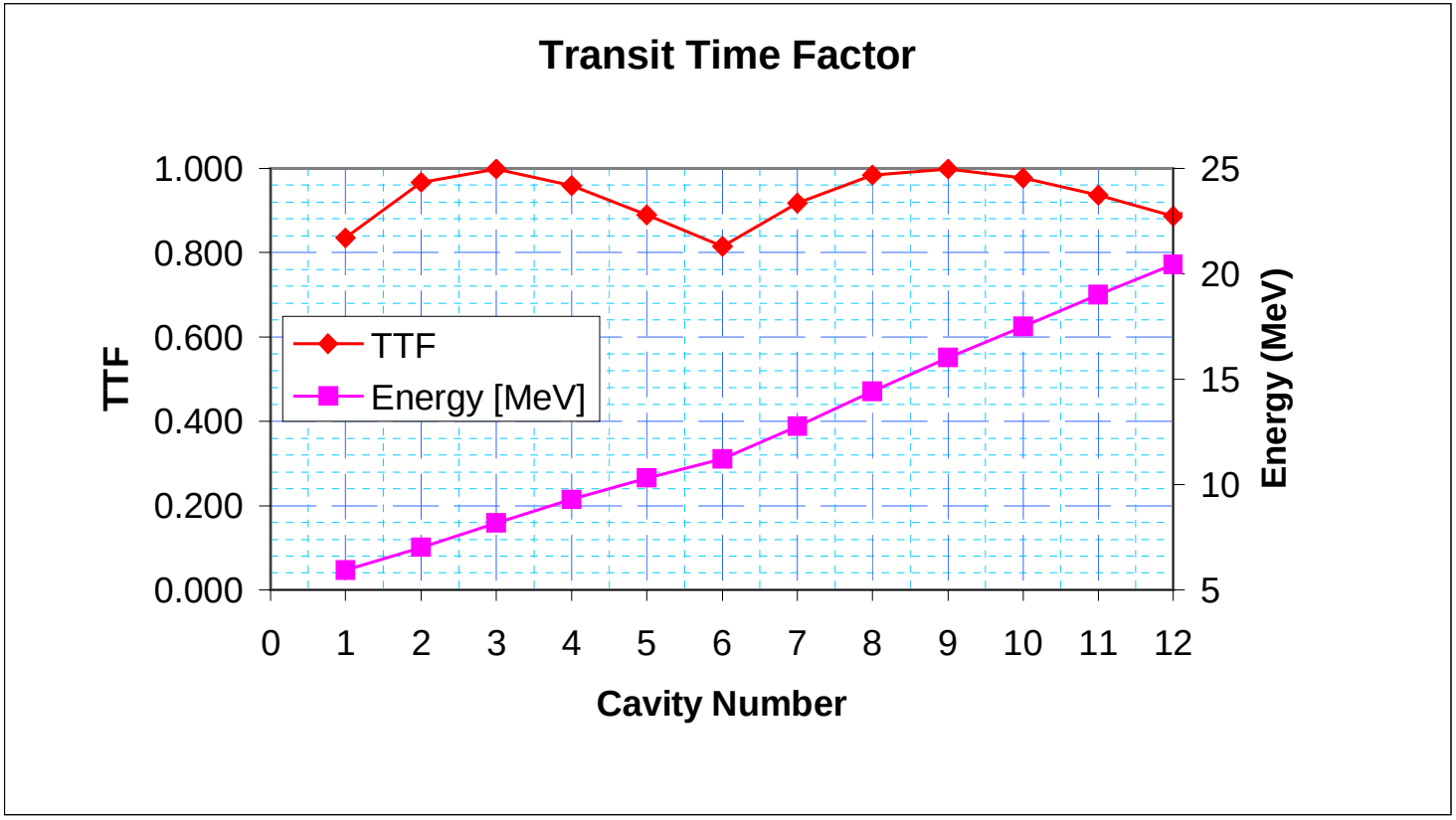


(TTF is calculated here for ideal gaps, with $\beta_0 = 0.12$ and $\beta_0 = 0.17$)

# 4-gap Ladder Resonator ($\beta_0$=0.17)

| | |
|---|---|
| **Frequency** | **352 MHz** |
| **Accelerating field flatness (between central and end cells)** | **96 %** |
| **$B_{s,p}$** | **65 mT (set as limit) @ the coupling hole** |
| **B at the flanged joint** | **1.5 mT** |
| **$E_{s,p}$** | **25 MV/m** (reas. limit 25÷30 MV/m) |
| **Energy gain at $\beta_0$ = 0.12** | **1.68 MeV/q** |
| **Accelerating Field $E_0$** | **8 MV/m** |
| **Beam Loading** | **6÷8 kW** |
| **$U/E_a^2$** | **89 mJ/(MV/m)$^2$** |
| **Rf coupling (coupling holes)** | **0.7 %** |
| **Q - @ 4 K (assumed)** | **5 x $10^8$** |
| **Geometrical factor G ($\Omega$)** | **62 $\Omega$** |
| **$B_{s,p}/E_0T$** | **8.7 mT/MV/m** |
| **Rf power dissipation (@ Q = 5 x $10^8$)** | **10 W** |

# Which cavity to squeeze in the available space ($L_{int}$=0.2 m)?

Common reference: $H_{pk}$ < 65 mT, $E_{pk}$ < 30 MV/m

## 2-gap options

- HWR, QWR conical and cylindrical: $E_{pk}/E_a$ ~5, $\Delta W$ < 0.6 MV
- Spoke (examples)

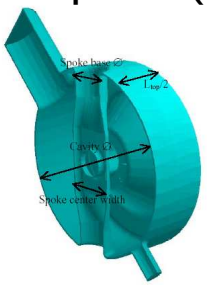

G. Olry et al., IPN-Orsay
EPAC2002, p. 2691

352 MHζ, $\beta_0$ **= 0.19**
$E_{pk}/E_a$ = 3.56
**$E_a$ = 8.4 MV/m**

**DESIGN OF A** β=0.175 **2-GAP SPOKE RESONATOR***
F.L.Krawczyk et al., SRF2001
http://conference.kek.jp/SRF2001/

## 3-gap options

K.W. Shepard et al., ANL
SRF2001
345 MHz, $\beta_0$ = 0.39

V. Andreev et al., INFN-LNL
EPAC2002, p. 2208

352 MHz, $\beta_0$ **= 0.13**
$E_{pk}/E_a$ = 4.65
**Ea = 4.77 MV/m**