Spoke Cavities at ANL - Past

1992

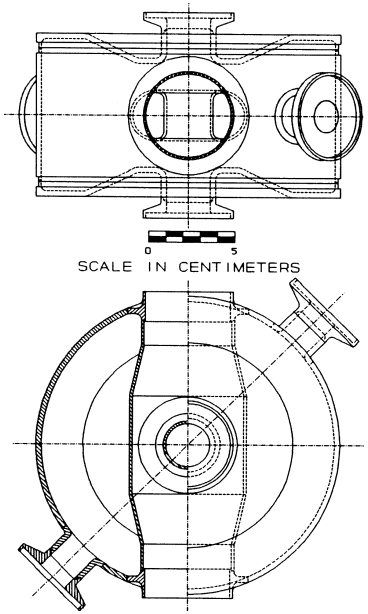

855 MHz, β = 0.3
Single-spoke,
operated at 7+ MV/m
(Jean Delayen, et al.)

1998

340 and 350 MHz,
β = 0.3 and β = 0.4
Single-spoke cavities
(operated at 10+ MV/m)

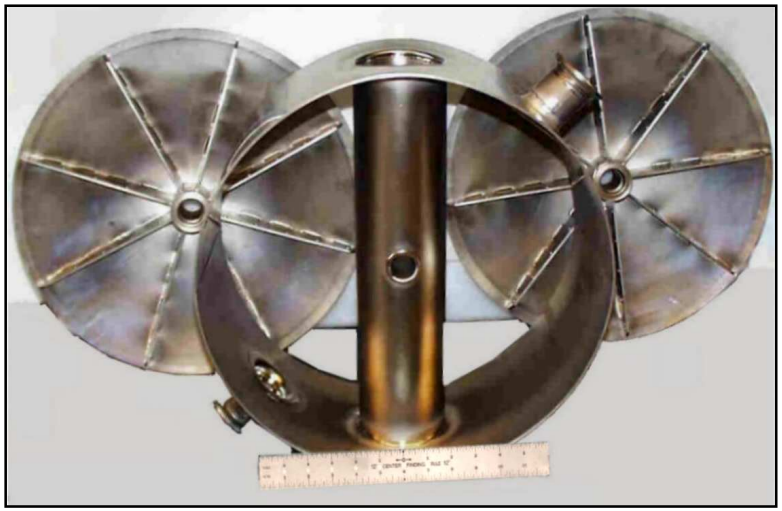

ANL Spoke Cavities Present & Future

2002

Being prototyped:
345 MHz, β = 0.4
Double-spoke

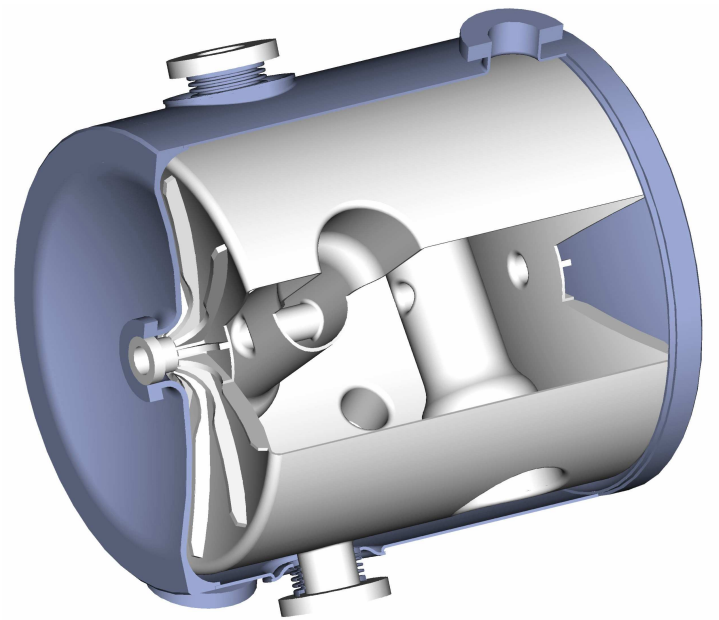

2003

Proposed:
345 MHz, β = 0.48 & 0.62
Triple-spoke

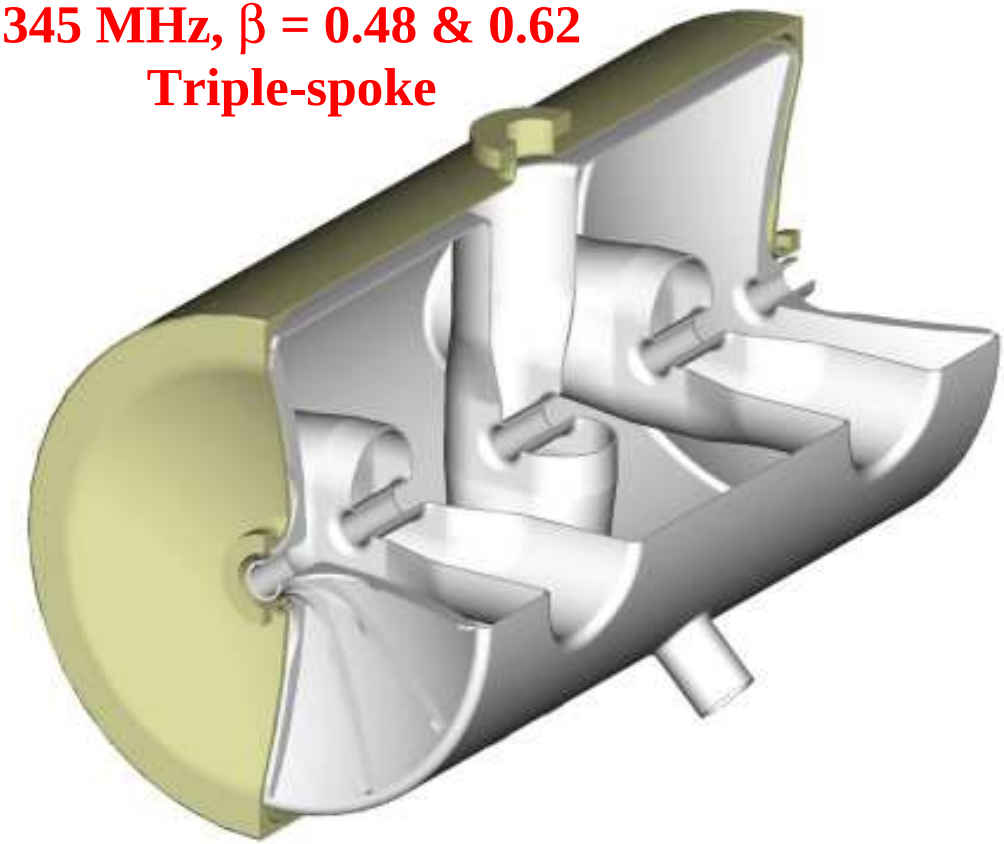

Contributers

- ANL (Kelly, Fuerst, Kedzie)
- JLAB (Delayen, Brawley)
- LLNL (Rusnak)
- LANL (Schrage, Tajima, Krawcyk)
- AES (Peterson, Schultheiss, Rathke)
- Sciaky, Inc.(Hajno)

The RIA Driver Linac

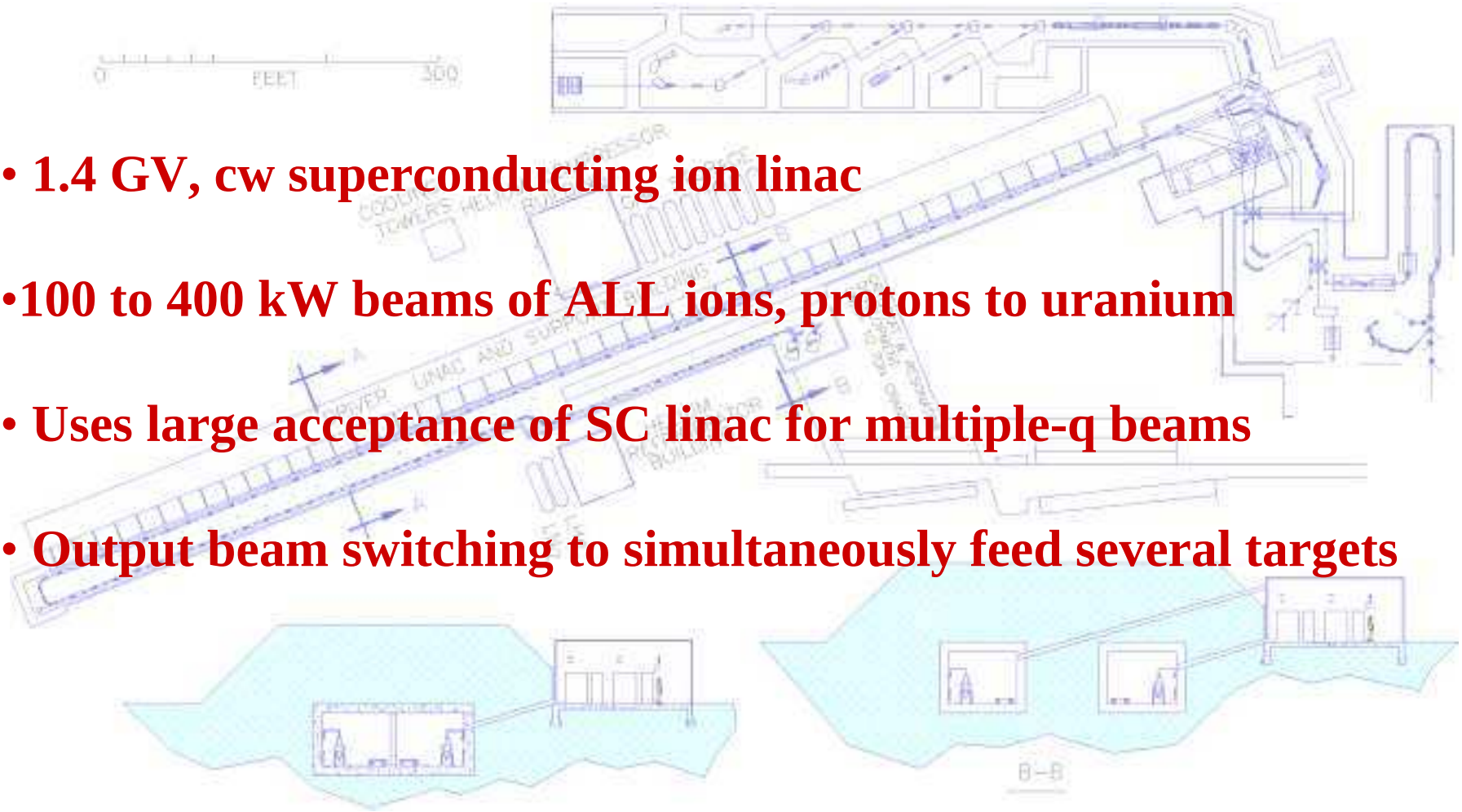

- 1.4 GV, cw superconducting ion linac
- 100 to 400 kW beams of ALL ions, protons to uranium
- Uses large acceptance of SC linac for multiple-q beams
- Output beam switching to simultaneously feed several targets

Principal Elements of the RIA Driver Linac (configured for a beam of uranium)

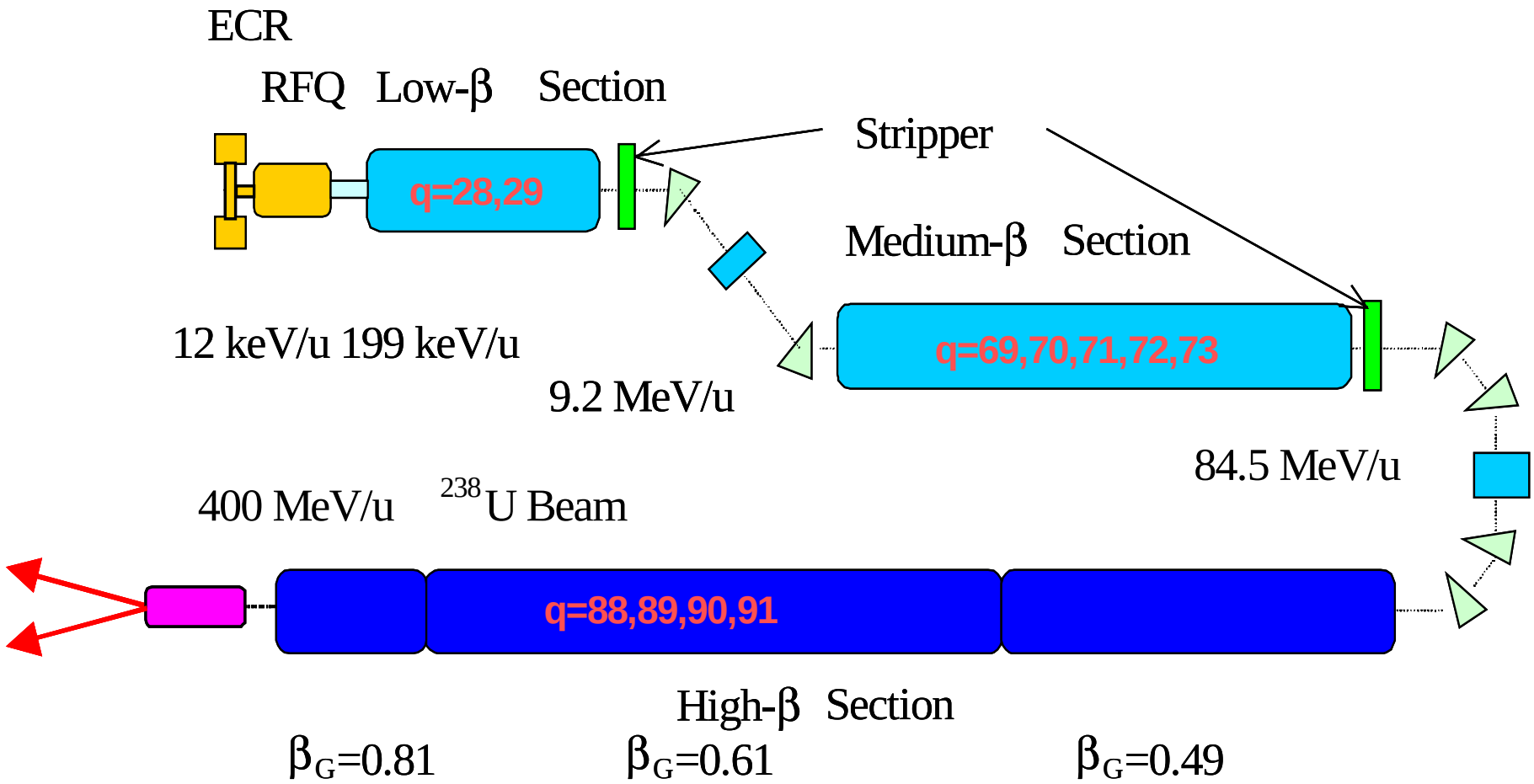

SC Cavity types for the RIA Driver Linac (baseline design)

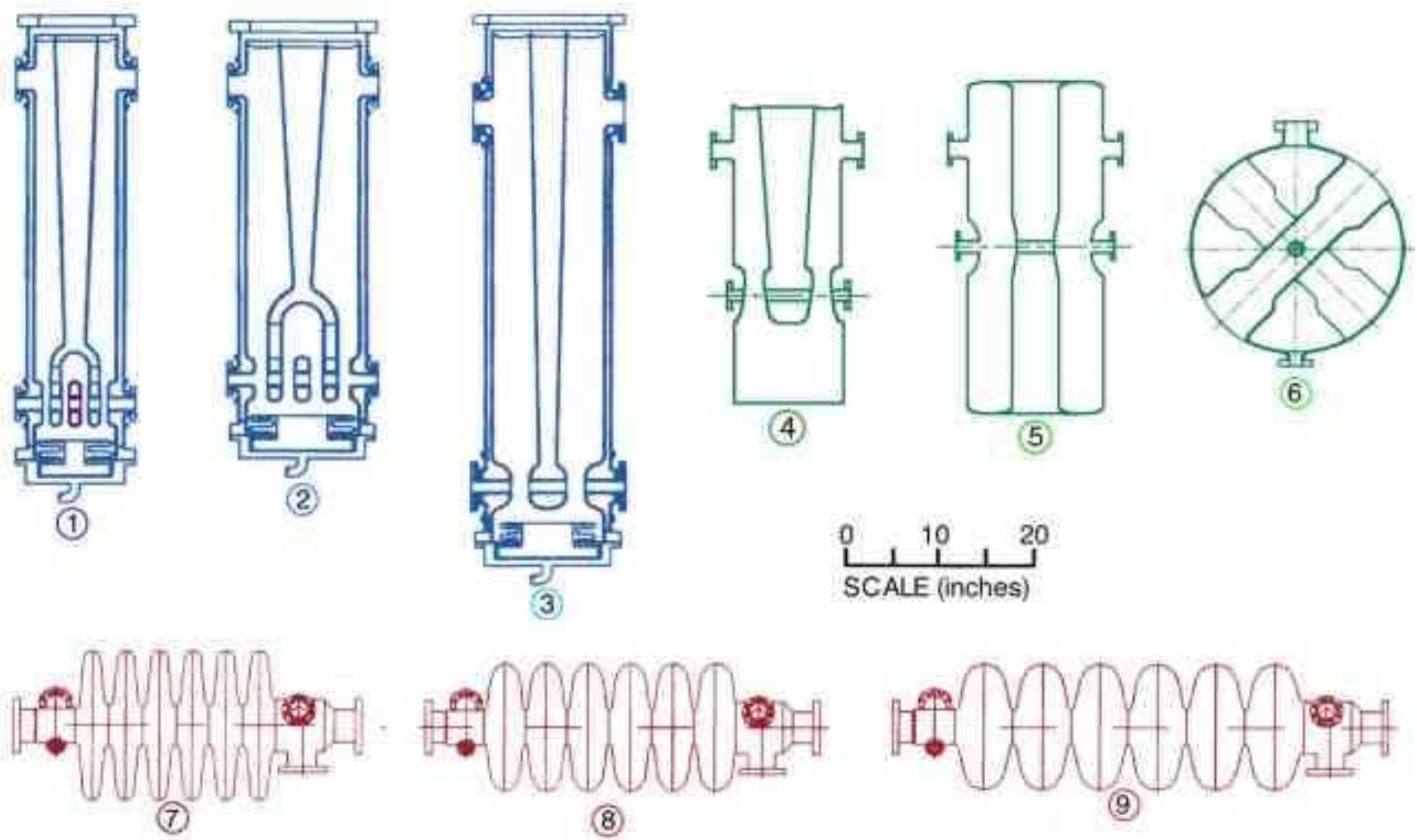

“Cavity-Walk” (voltage gain per cavity) for the Baseline RIA Driver Design

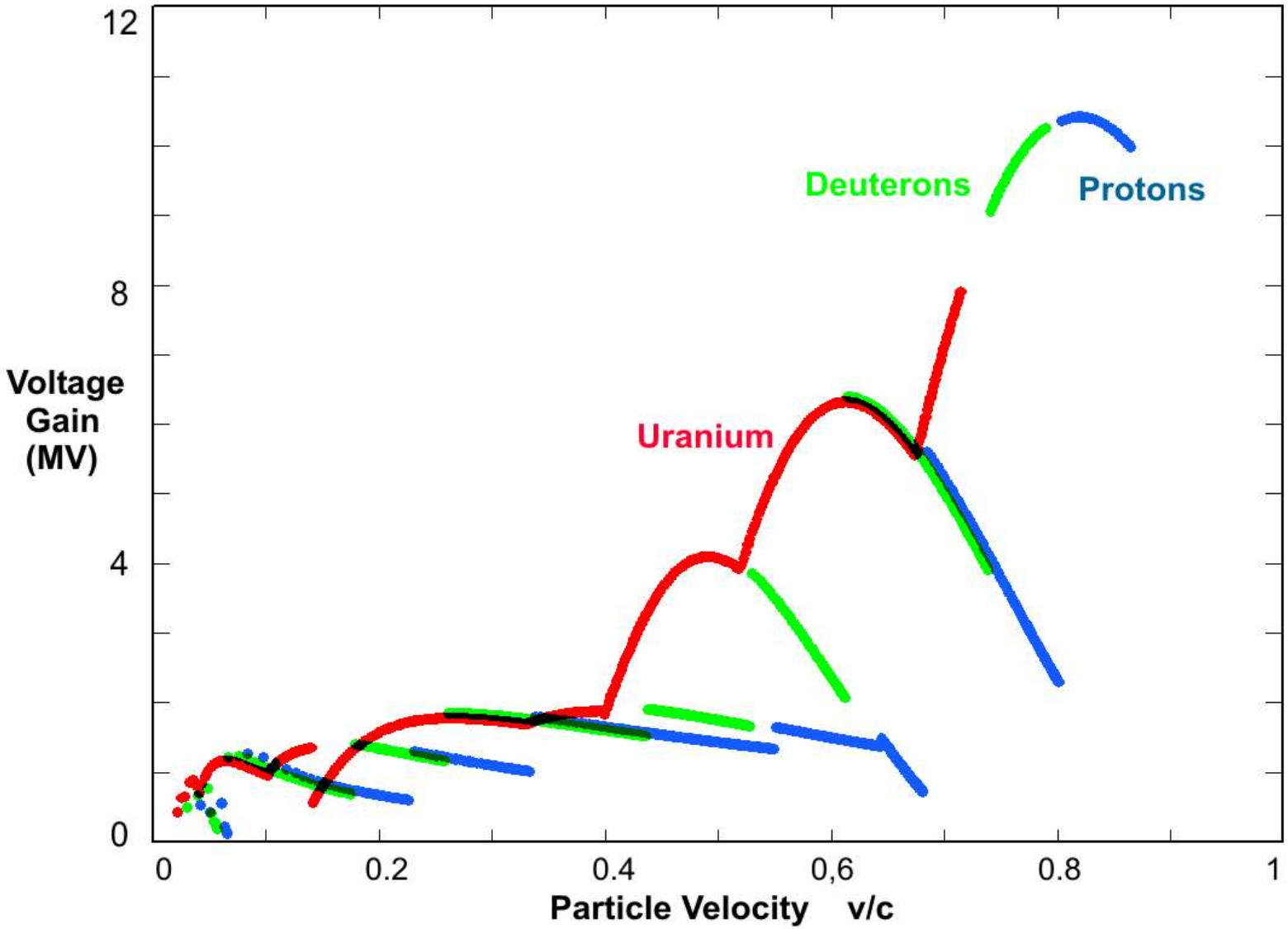

Some results of the Harrison committee cost review (January 2001)

- Much of the linac cost scales linearly with the number of cavities (cavities, couplers, rf systems, cryomodules, cryogenics, control, alignment, installation, etc.)

- Drift-tube linac cost = 97 M$ (with contingency)
  - 393 k$ total cost per cavity
  - Cost of bare cavity averaged 24% of total

- Elliptical-cell Linac cost = 143 M$
  - 762 k$ total cost per cavity

Intermediate-velocity cavities for RIA

115 MHz QWR

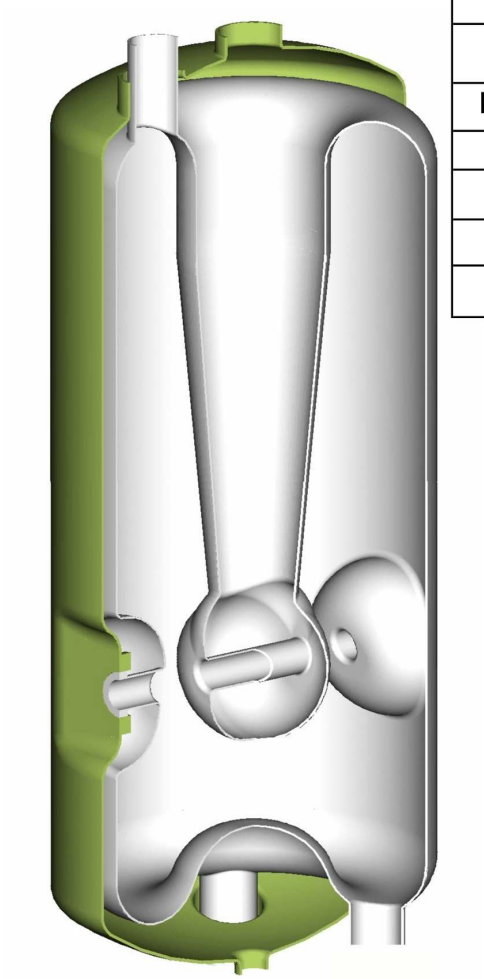

QR_S =	42
β_{Geom} =	0.15
Eff. Length =	25 cm
At 1 MV/m	
RF Energy =	170 mJ
E_{peak} =	3.17 MV/m
B_{peak} =	57 G

QR_S =	58
β_{Geom} =	0.26
Eff. Length =	30 cm
At 1 MV/m	
RF Energy =	345 mJ
E_{peak} =	2.9 MV/m
B_{peak} =	78 G

172.5 MHz HWR

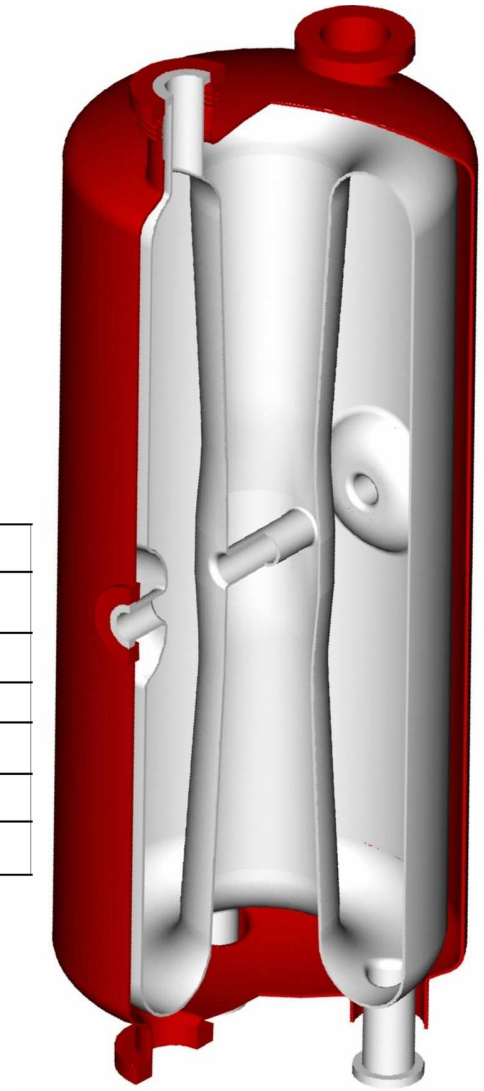

Double-spoke for the RIA Driver Linac

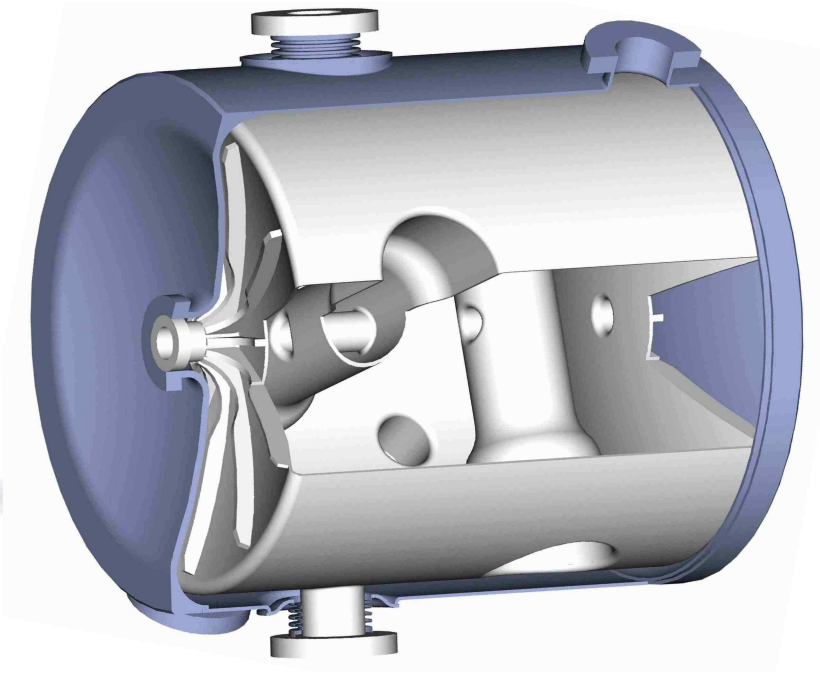

QR_S =	71
β_{Geom} =	0.393
Eff. Length =	38.1 cm
At 1 MV/m	
RF Energy =	151 mJ
E_{peak} =	3.47 MV/m
B_{peak} =	69 G

345 MHz β = 0.4 Niobium cavity being prototyped for the RIA linac

Higher gradients in drift-tube cavities

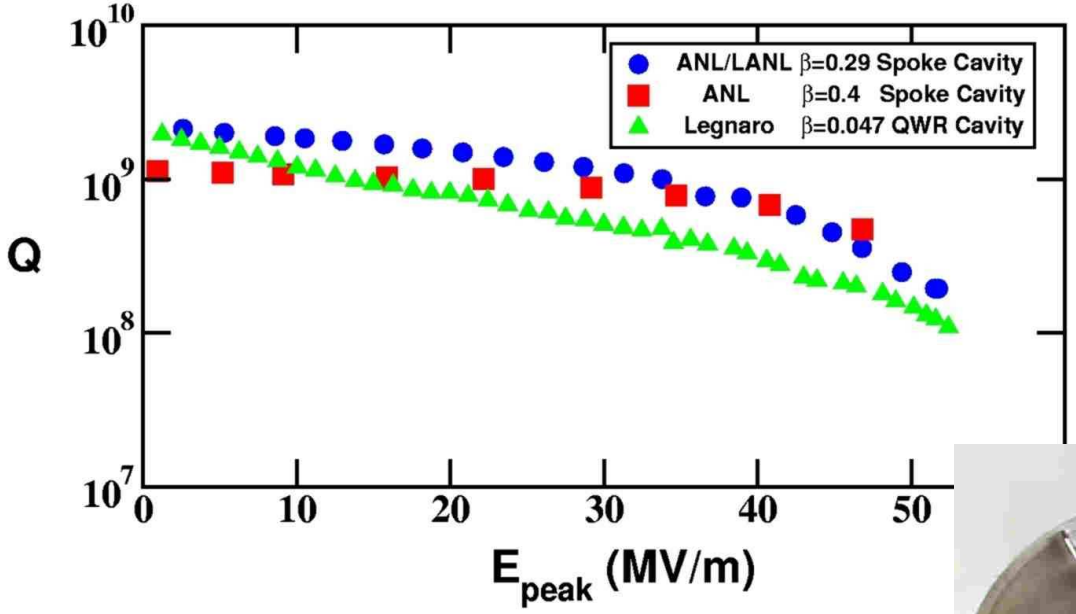

In tests at ANL a 350 MHz, beta .4 spoke cavity has been operated CW at Ea = 7 MV/m (28 MV/m Epeak) for 1 month

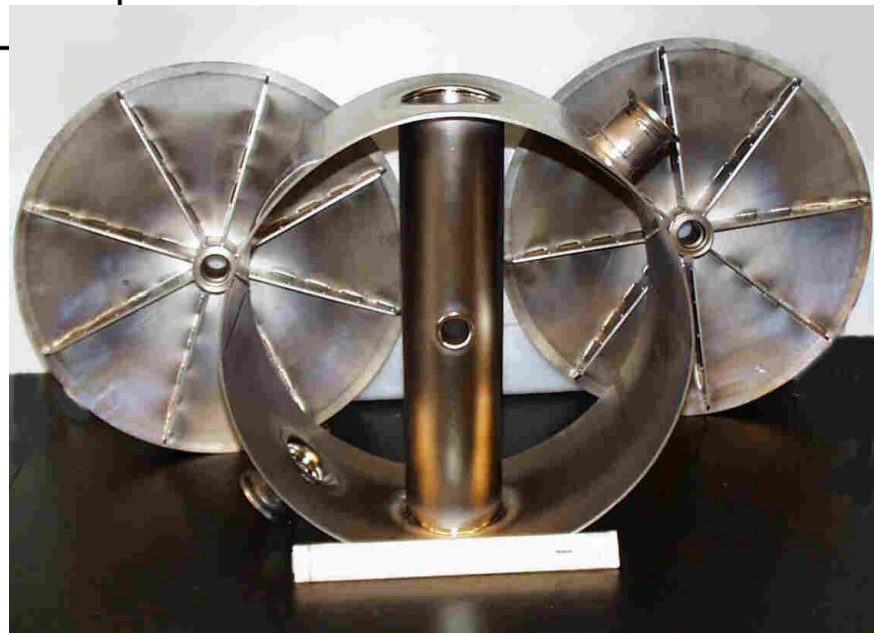

In the past 18 months, high-pressure water rinsing, at several different laboratories, has produced increased gradients in drift-tube cavities

Preliminary designs for triple-spoke cavities for the RIA driver

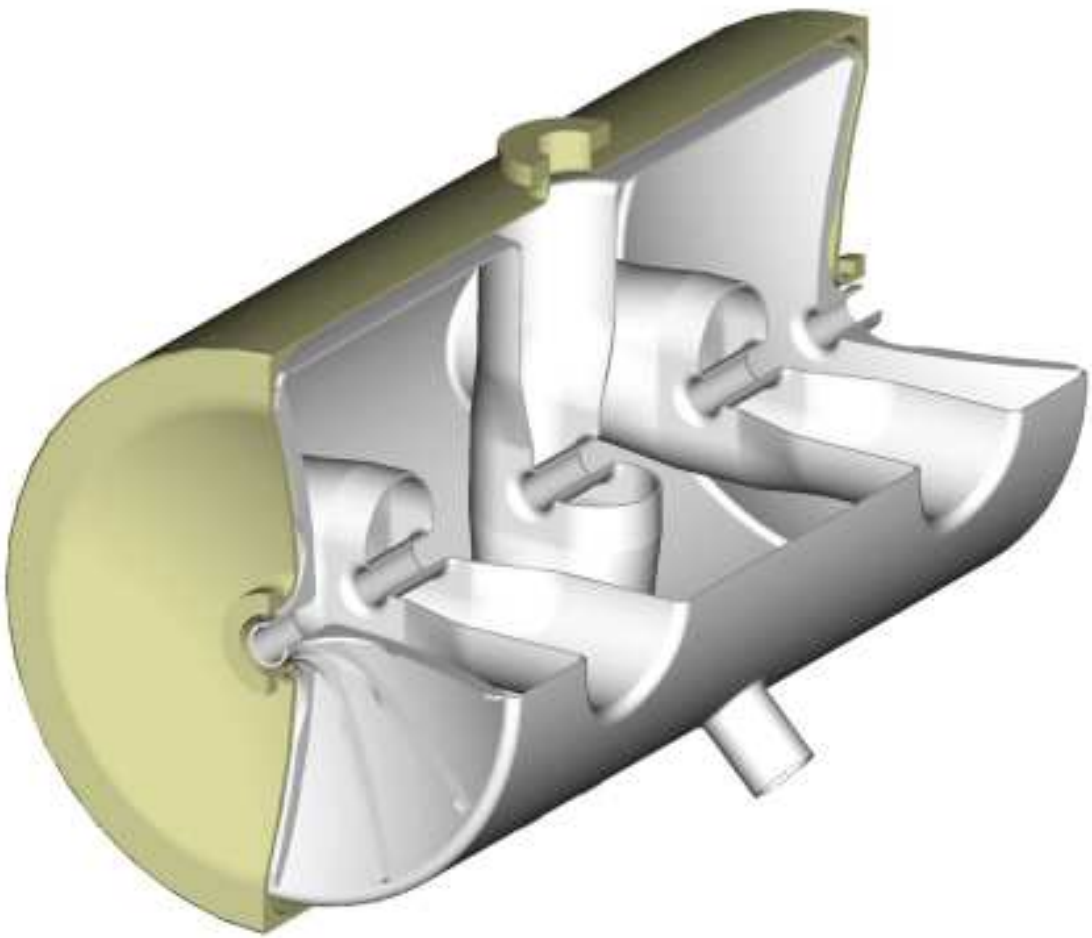

$ß_{GEOM}$	0.48	0.62
$L_{EFFECTIVE}$	65 cm	85 cm
Frequency	345 MHz	345 MHz
QR_S	92	103
€		
at 1 MV/m		
E_{PEAK}	3.0	3.1
B_{PEAK}	90	88
RF Energy	356 mJ	582 mJ

Why triple-spoke cavities?

- **Fewer types (2) and a smaller total number of cavities are required, reducing costs and the length of the linac tunnel.**
- **The cavities can operate at a higher temperature, reducing the complexity of the cryogenic system and the total cryogenic load.**
- **Beam quality is improved, because of increased longitudinal acceptance and the elimination of a frequency transition**
- **The possibilities for beam loss and activation are reduced.**
- **Output energies for the lighter ions are increased, protons by more than 100 MeV, by the broader velocity acceptance of the triple-spoke geometry.**
- **For $\beta \leq 0.6$, the spoke-loaded structure has superior mechanical stability**

Voltage gain per cavity vs. velocity for 345 MHz spoke cavity option

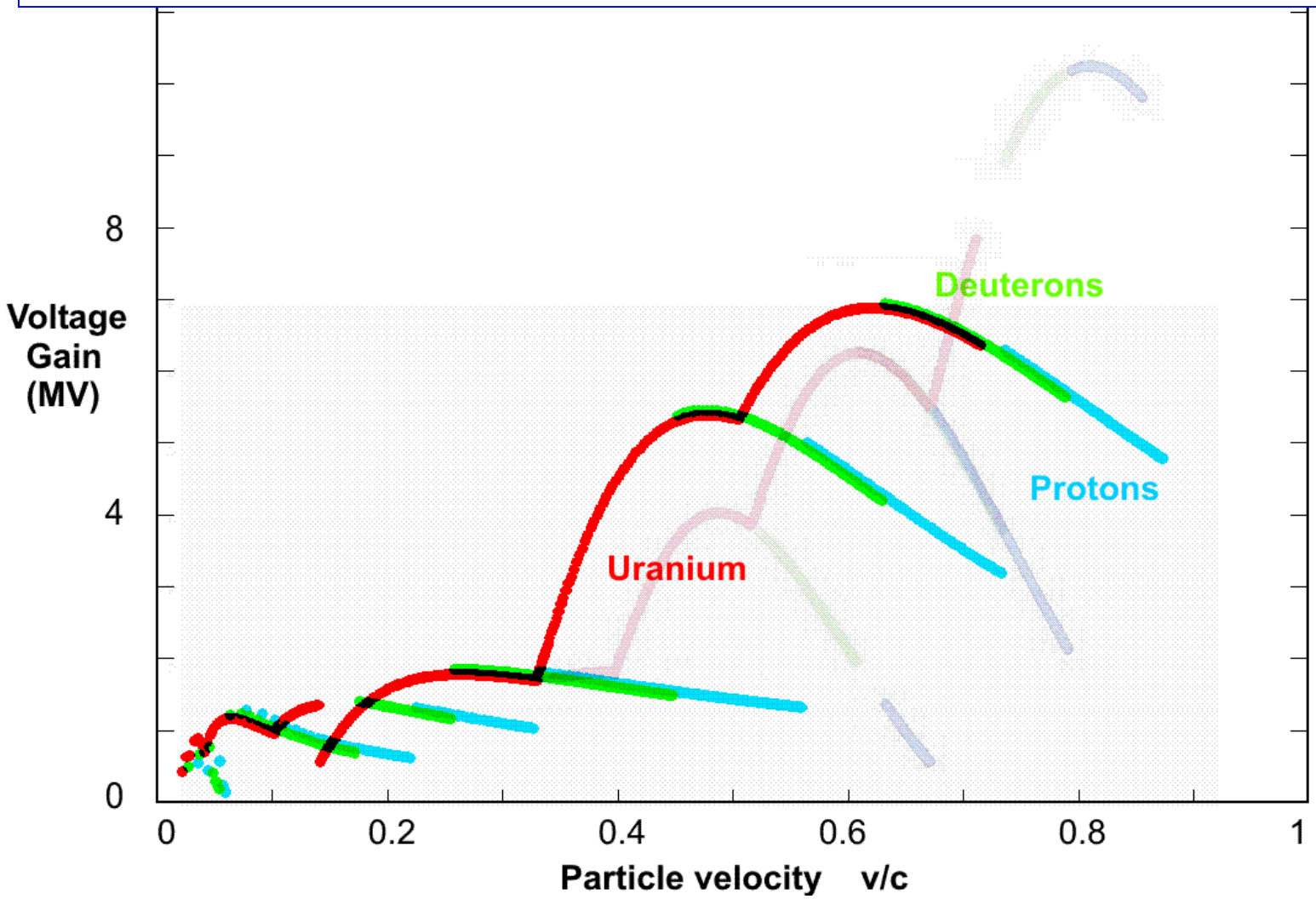

Comparison of Beam Output Energies for Elliptical-cell and spoke cavity options

Species	Input Q	Strip	Output Energy (MeV/A)	
			E - 6 Cell	3 Spoke
H	1	none	893	988
^{3}He	2	none	707	737
D	1	none	587	595
^{136}Xe	18	twice	461	451
^{238}U	29	twice	403	404

A low frequency option for the high-energy section – 345 MHz spoke cavities

Elliptical-Cell		Triple-Spoke	
Beta	# Cav	# Cav	Beta
0.031	5	5	0.031
0.061	32	32	0.061
0.151	30	30	0.151
0.263	88	100	0.263
0.393	72	**	**
Subtotal	227	167	DT Cavities
0.490	58	66	0.475
0.610	80	104	0.617
0.810	28	**	**
Subtotal	166	170	Hi-beta Cavities
Total	393	337	Cavity Count

Longitudinal Acceptance for the 805 MHz and 345 MHz Options

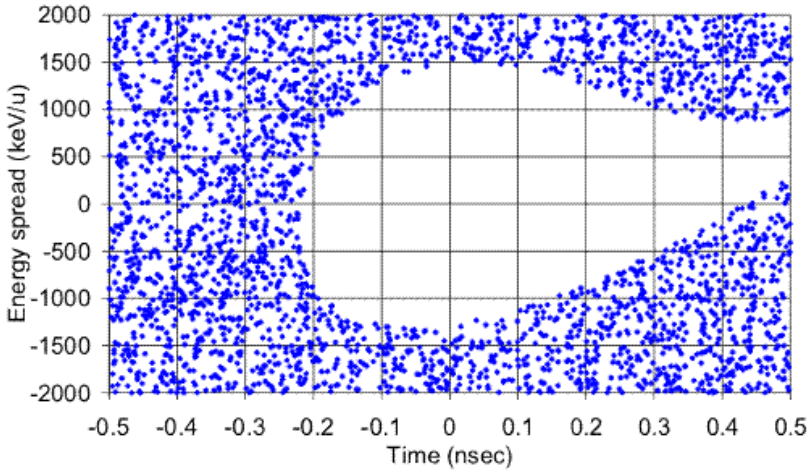

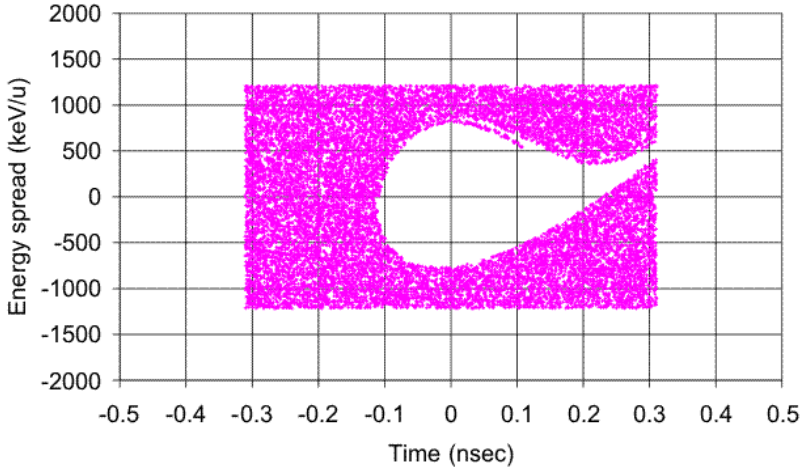

345 MHz Spoke cavities increase the longitudinal acceptance four-fold

805 MHz Elliptical-cell cavities