CONTROLS
--
OVERVIEW

Jean Delayen
Jefferson Lab

Spoke Resonator Workshop
Los Alamos
7-8 October 2002

Thomas Jefferson National Accelerator Facility

Operated by the Southern Universities Research Association for the U.S. Depart. Of Energy

Sources of Frequency Variations

- Slow Environmental Sources, Drifts
  - thermal effects, cryogen pressure
- Fast Environmental Sources, Dynamical Effects
  - ambient vibrations, microphonics
- Coupling between Electromagnetic and Mechanical Modes through Radiation Pressure
  - ponderomotive effects, Lorentz detuning
- Frequency Tuners
  - mechanical, piezo

Slow Frequency Drifts

Measured sensitivity : 95 Hz/torr

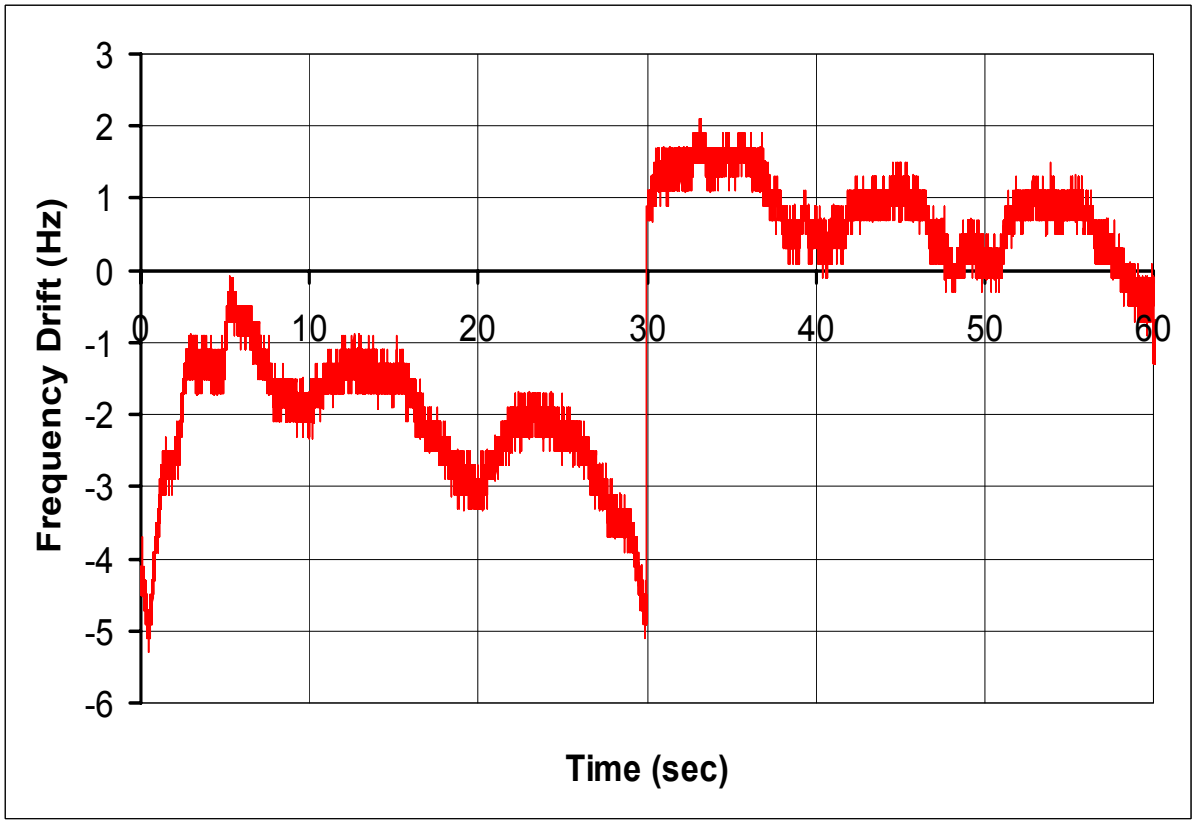

Cavity #2

Microphonics (probability density)

6-cell 805 MHz, β=0.61 in cryomodule

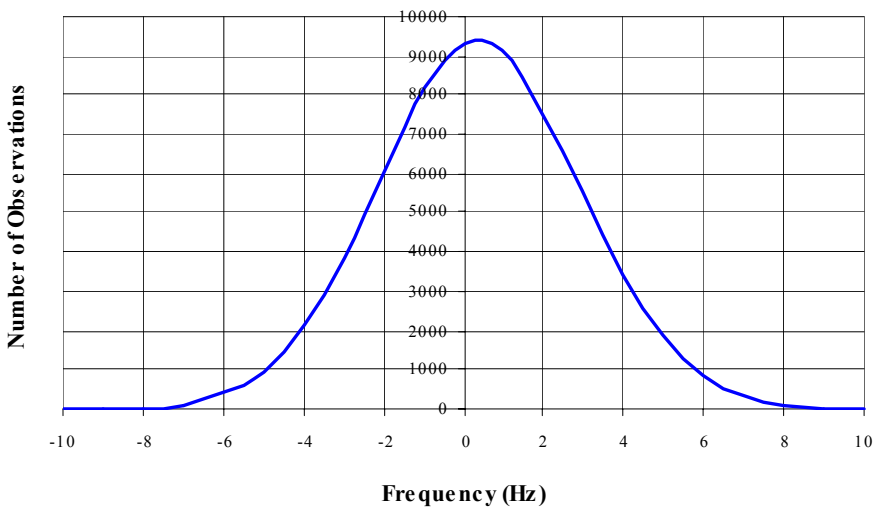

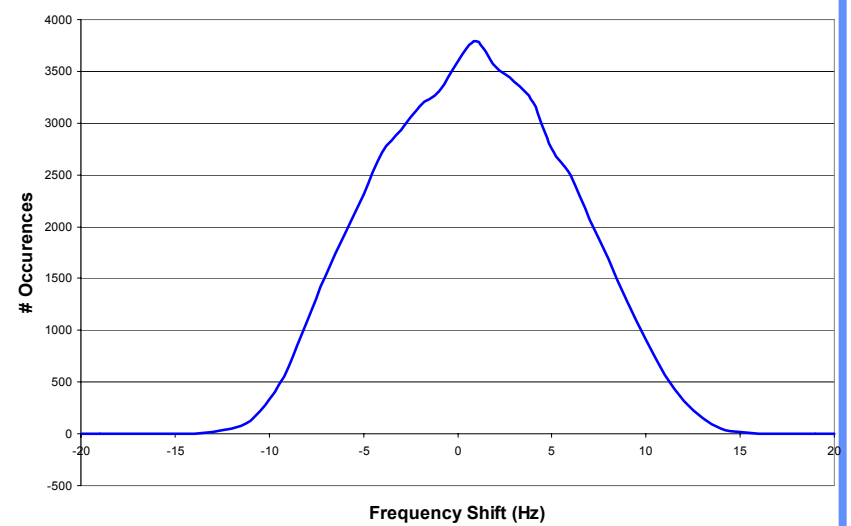

Cavity #2

~3Hz rms

Cavity #1

~7Hz rms

Thomas Jefferson National Accelerator Facility

Operated by the Southern Universities Research Association for the U.S. Depart. Of Energy

Microphonics (probability density)

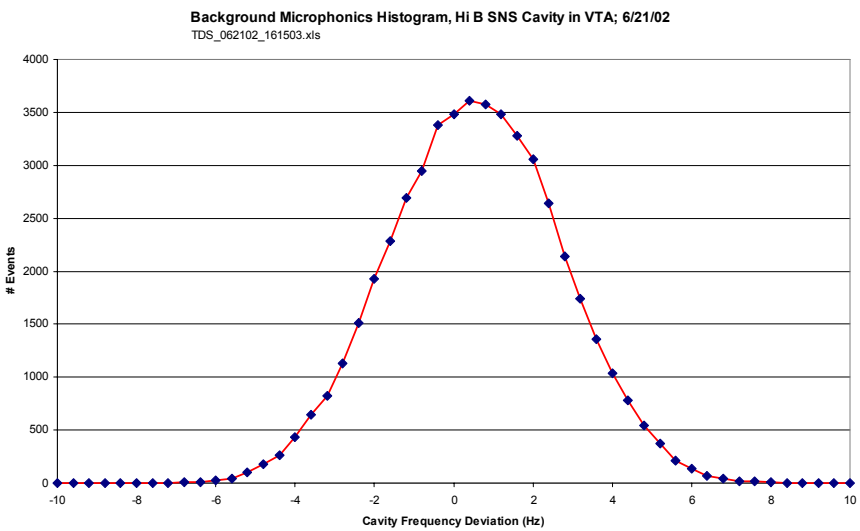

6-cell 805 MHz, β=0.82 in VTA

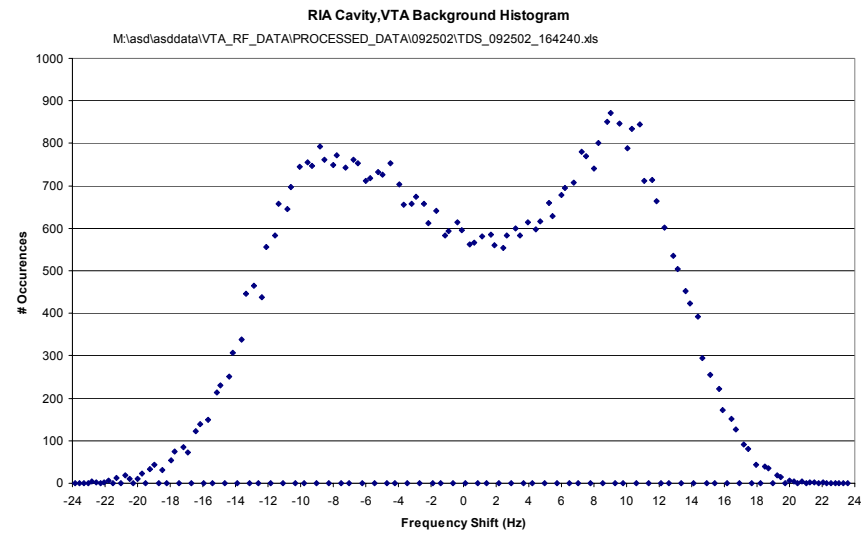

6-cell, 805 MHz, β=0.47 in VTA

Thomas Jefferson National Accelerator Facility

Operated by the Southern Universities Research Association for the U.S. Depart. Of Energy

Microphonics (frequency spectra)

Frequency spectra are different between cavities

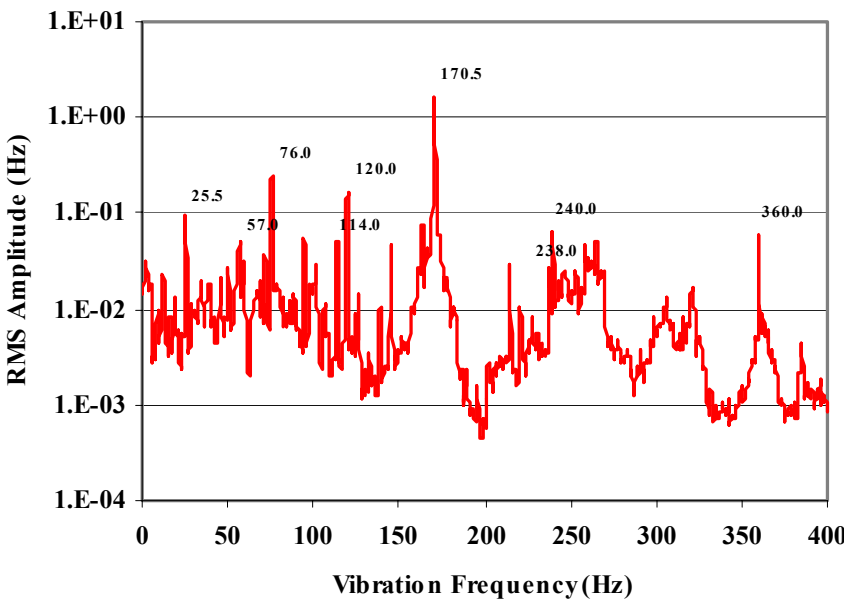

Cavity #2

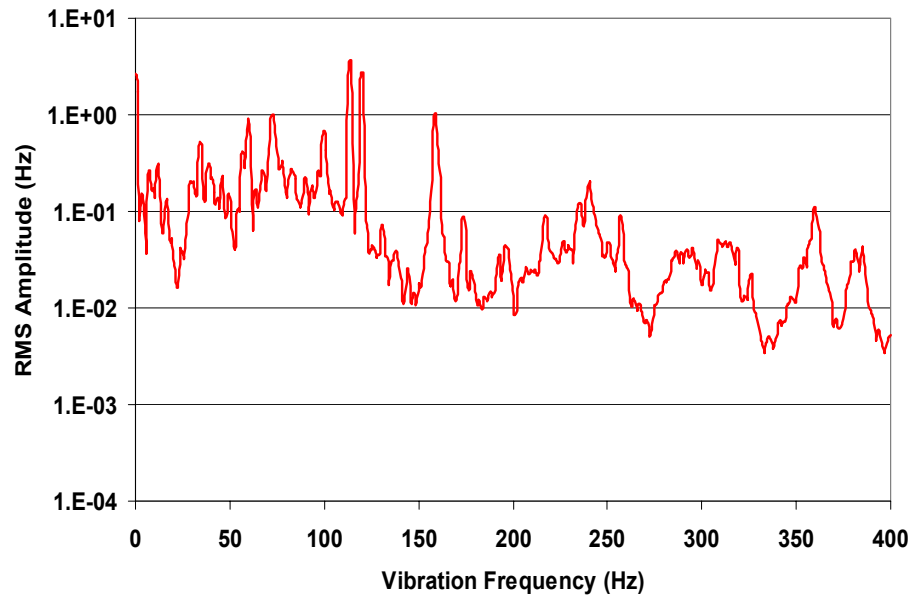

Cavity #1

Thomas Jefferson National Accelerator Facility

Operated by the Southern Universities Research Association for the U.S. Depart. Of Energy

Ponderomotive Effects – Lorentz Detuning

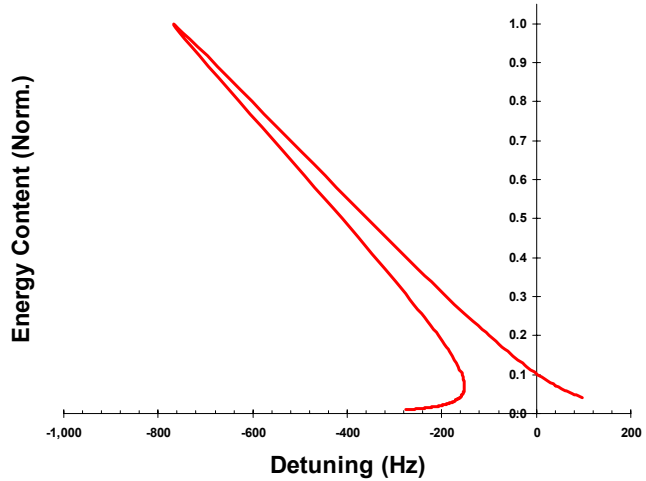

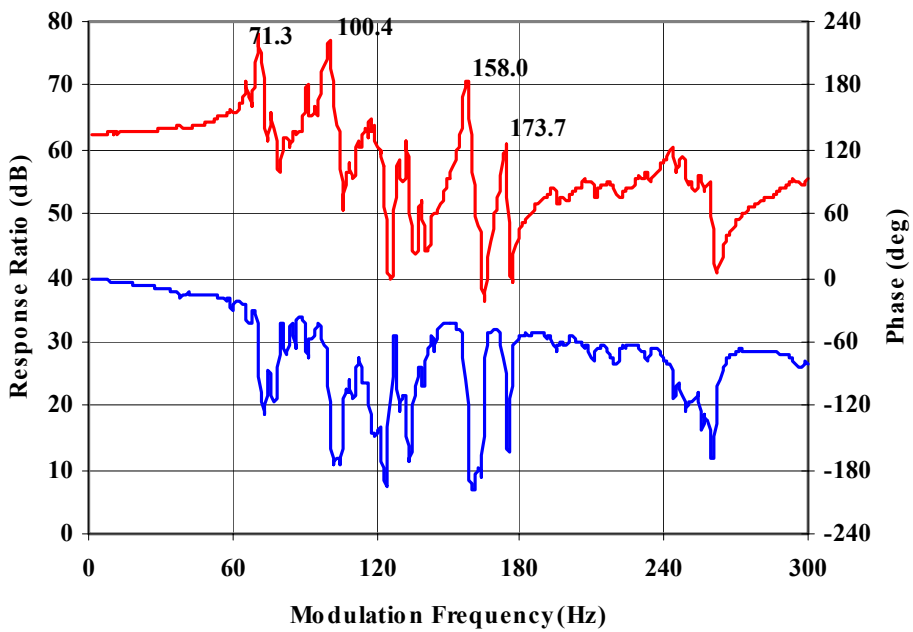

- Response of cavity frequency to small sinusoidal modulation of cavity rf field

Cavity #1

Piezo-Driven Response

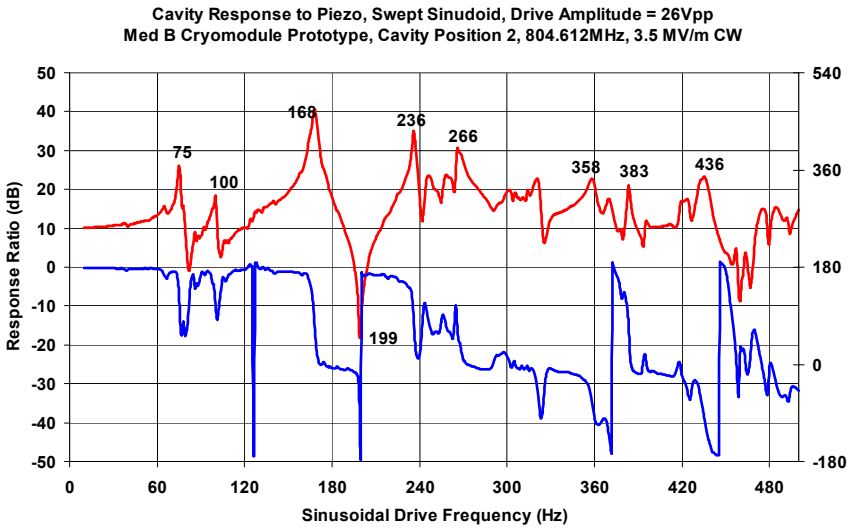

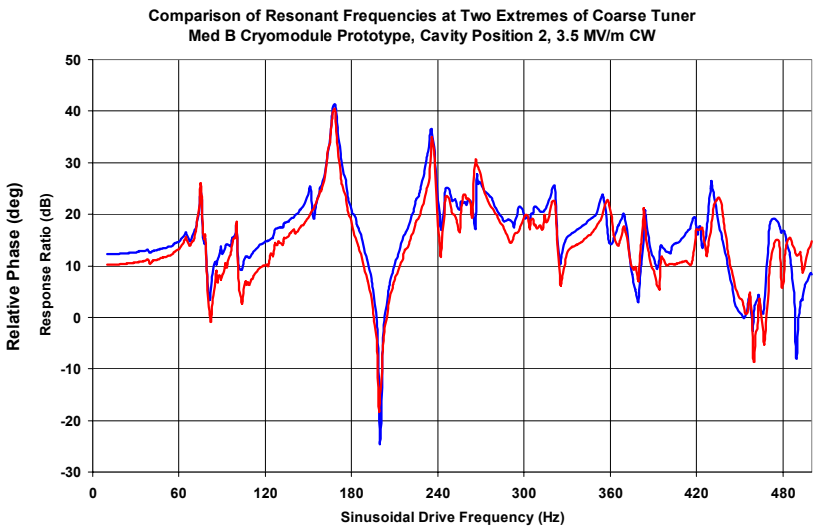

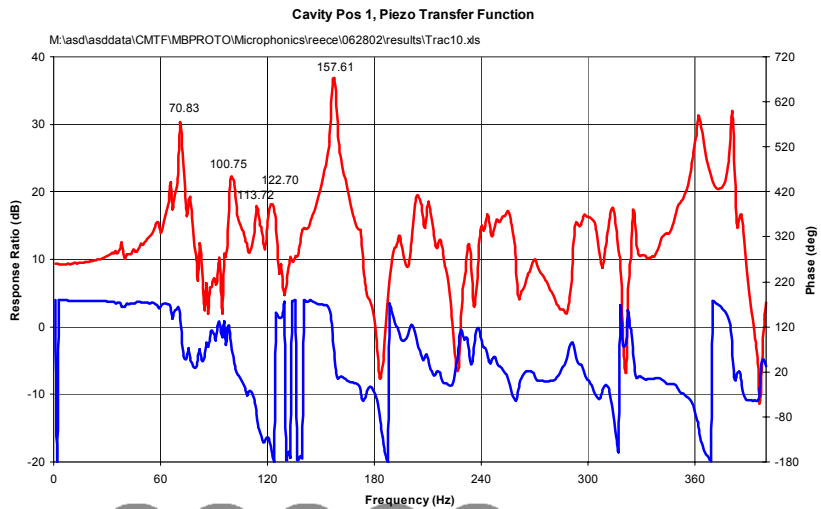

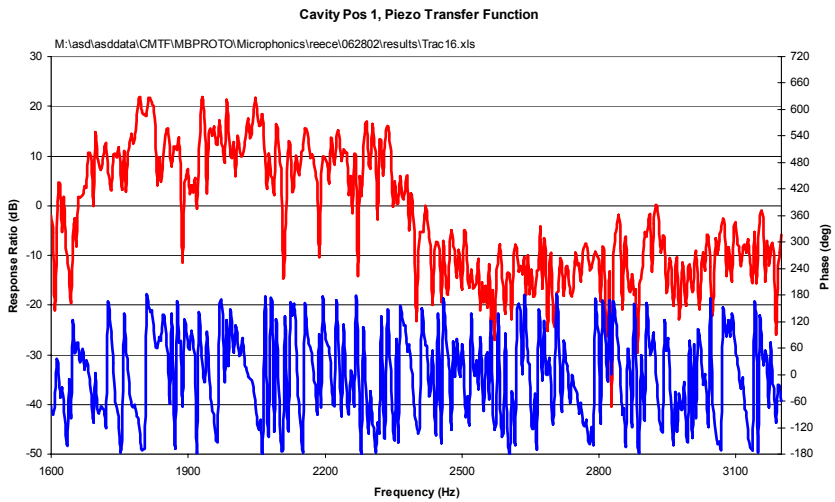

RF Power

$$P = \left(\frac{Q_0 + Q_{ext}}{4Q_{ext}} \right) \frac{E^2 l^2}{\frac{R}{Q} Q_{ext}} \left[\left(1 + \frac{Q_{ext}}{Q_b} \right)^2 + \left(\frac{Q_{ext}}{Q_m} \right)^2 \right]$$

with: $$Q_b = \frac{\omega U}{\text{Power absorbed by beam}} = \frac{El}{I \cos\phi_0 \frac{R}{Q}}$$

$$Q_m = \frac{\omega_0}{2\Delta\omega_d} \quad , \quad \Delta\omega_d = \Delta\omega_{static} + \Delta\omega_{microphonics}$$

$\Delta\omega_d$ is usually taken as twice tuner resolution plus 6 x rms microphonics

When $I = 0, \quad P_{opt} = U \Delta\omega_d$

3-spoke, 345 MHz, β=0.48

6.82 MV

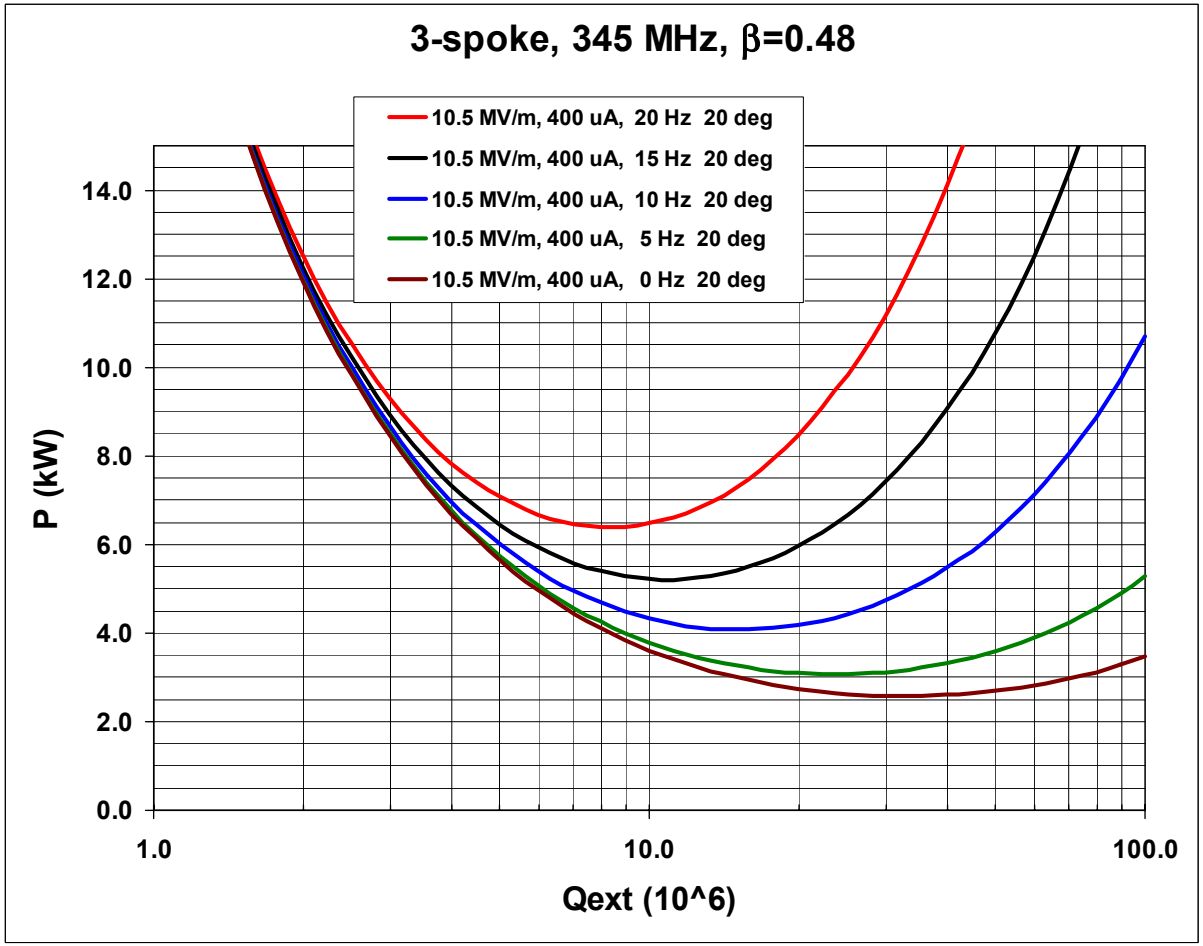

Thomas Jefferson National Accelerator Facility

Operated by the Southern Universities Research Association for the U.S. Depart. Of Energy

6-Cell, 805 MHz, β=0.47

5.53 MV

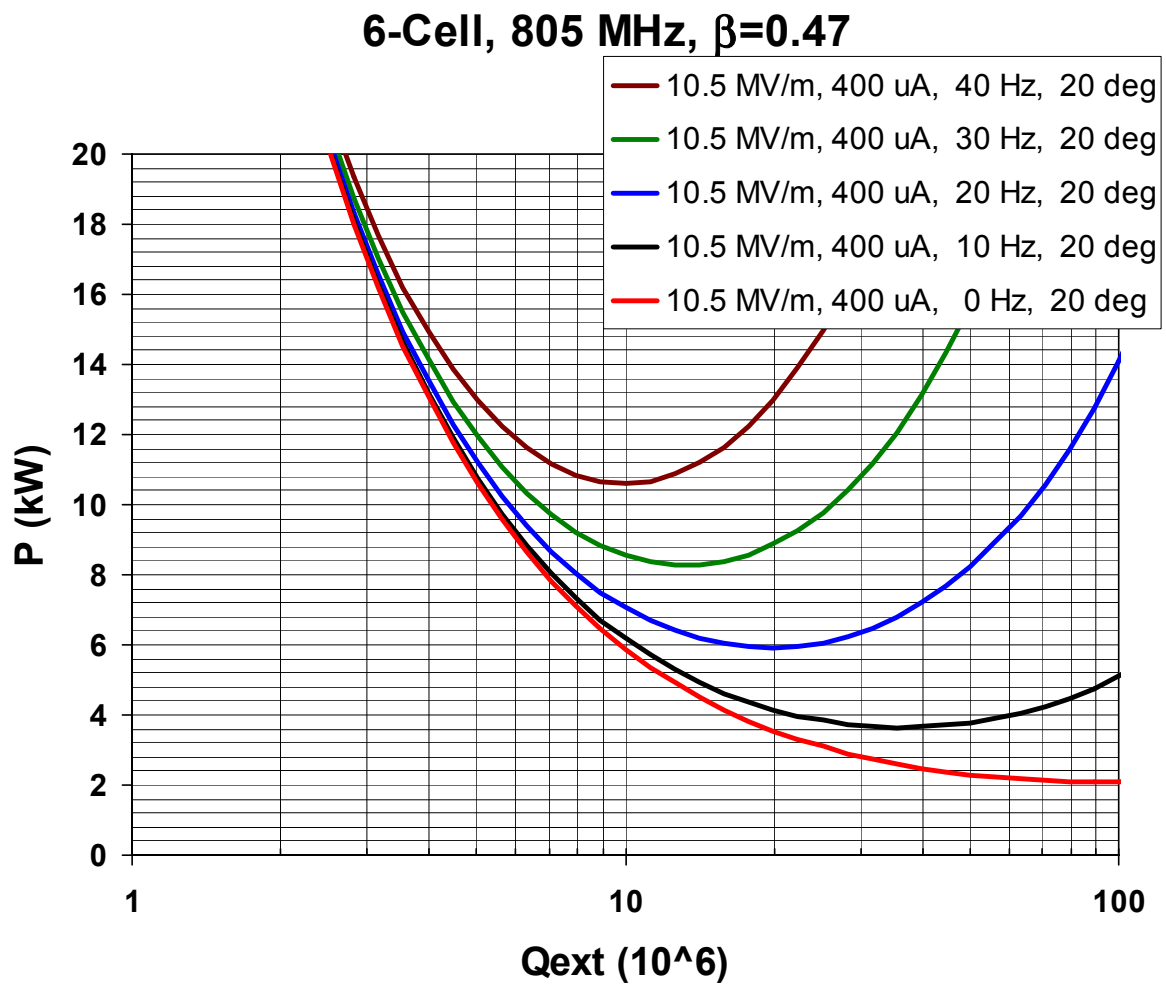

Thomas Jefferson National Accelerator Facility

Operated by the Southern Universities Research Association for the U.S. Depart. Of Energy

3-spoke, 345 MHz, β=0.62

8.9 MV

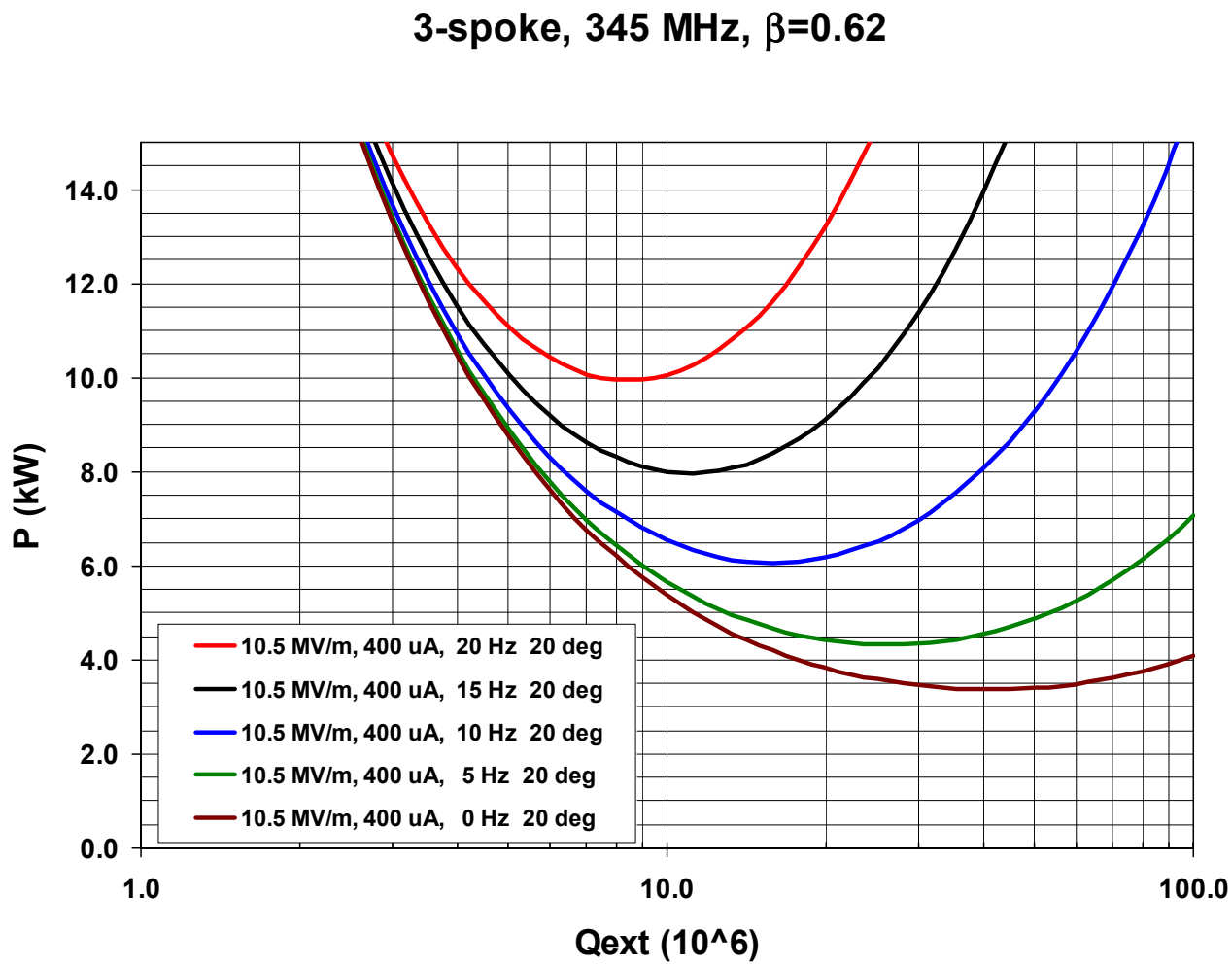

6-Cell, 805 MHz, β=0.61

8.9 MV

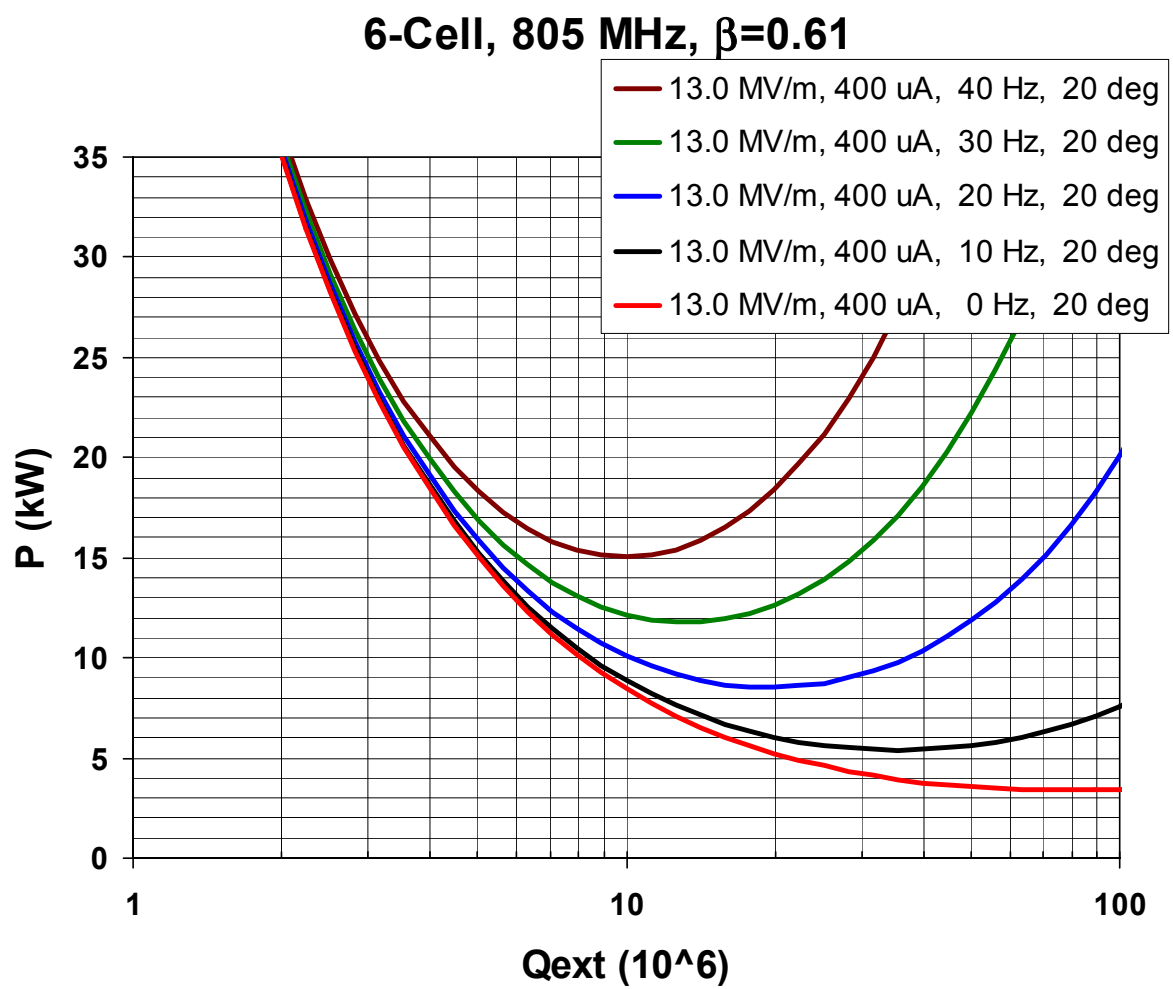

Thomas Jefferson National Accelerator Facility

Operated by the Southern Universities Research Association for the U.S. Depart. Of Energy

Negative Phase Feedback

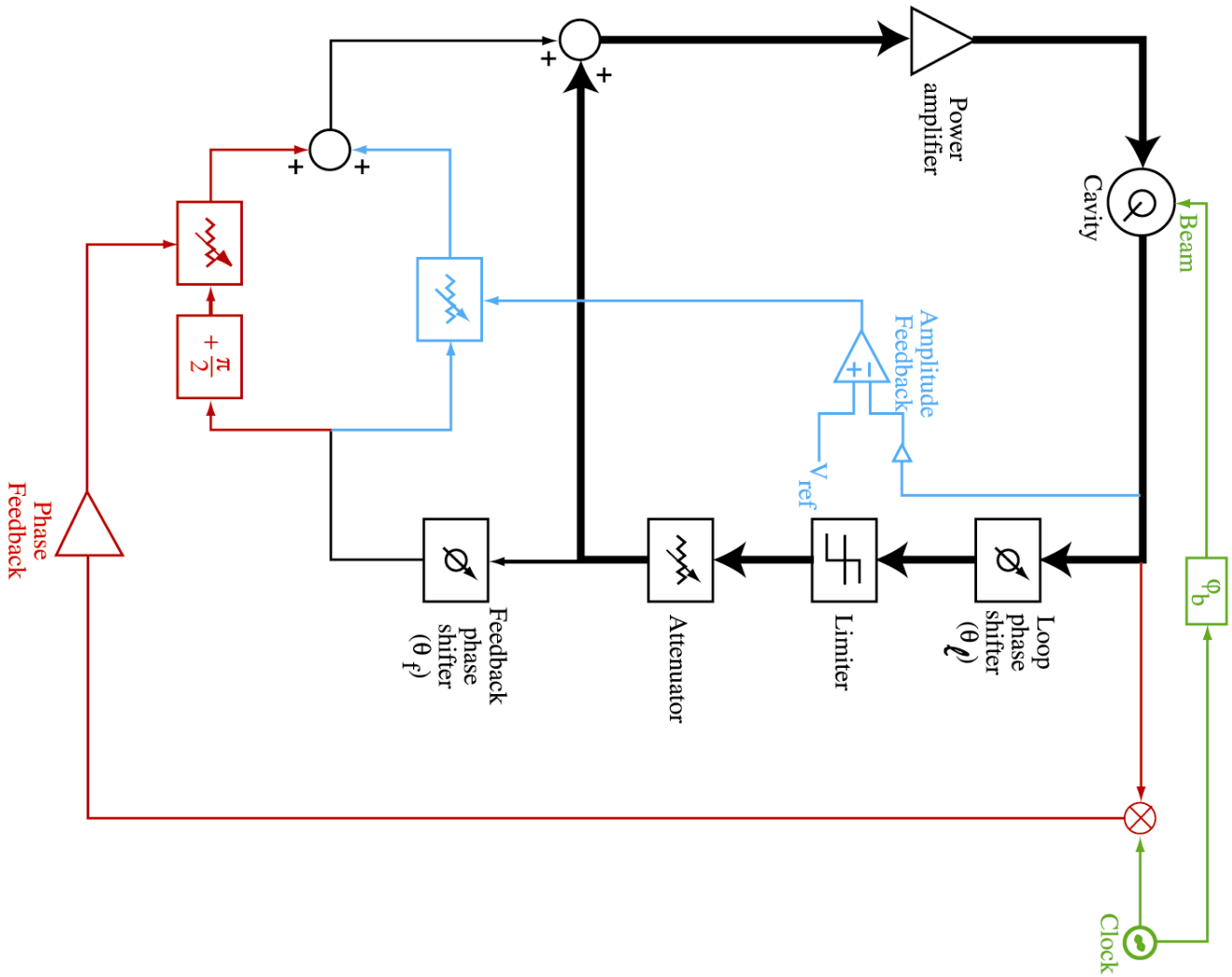

Electronic Damping of Microphonics

Amount of modulation required to reduce frequency excursions by a given amount:

$$\frac{<\delta\omega_{ex}^2>}{<\delta\omega_c^2>} = K^2 \qquad K : \text{reduction factor}$$

$$<\delta\nu^2> = \frac{<\delta\omega_{ex}^2>}{4Q_\mu^2\left(k_\mu V_o^2\right)^2}\ \frac{\left[K^2-1\right]^2}{K^2}$$

If $<\delta\omega_{ex}^2> = (2\pi\times 5)^2 = 1000$

$$\left(k_\mu V_o^2\right)^2 = (2\pi\times 300)^2 = 4\ \ 10^6$$

$$\left(2Q_\mu\right)^2 = (2\times 2\pi\times 100\times 0.25)^2 = 10^5$$

for $K = 2$ $\qquad <\delta\nu^2> \simeq 0.5\ \ 10^{-8}$

Voltage-Controlled Reactance
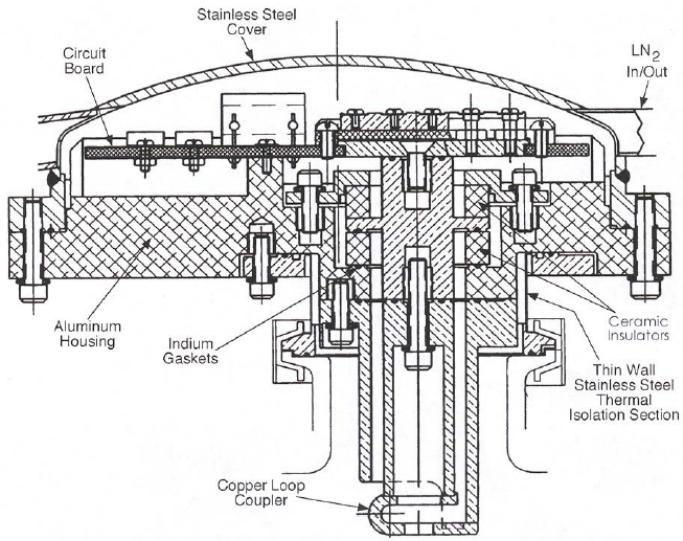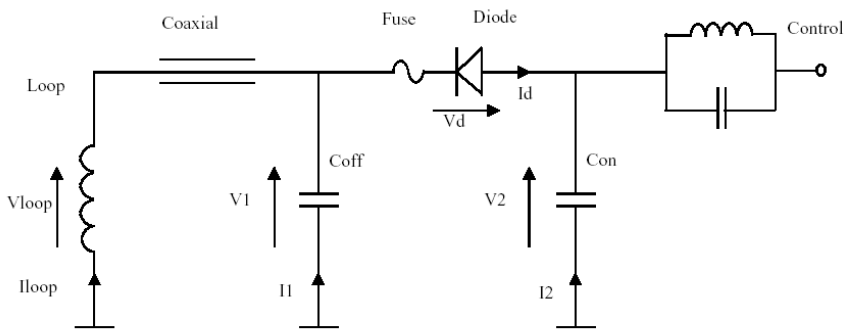
- Has been successfully applied at lower frequencies
- Unlikely to be applicable at the frequency and power levels for TM_{010} cavities