SC RF CAVITY ACTIVITTIES @ FZJ

E. Zaplatin, W. Bräutigam, M. Pap, U. Rindfleisch, M. Skrobucha, R. Stassen

COSY SC LINAC CAVITY GEOMETRY

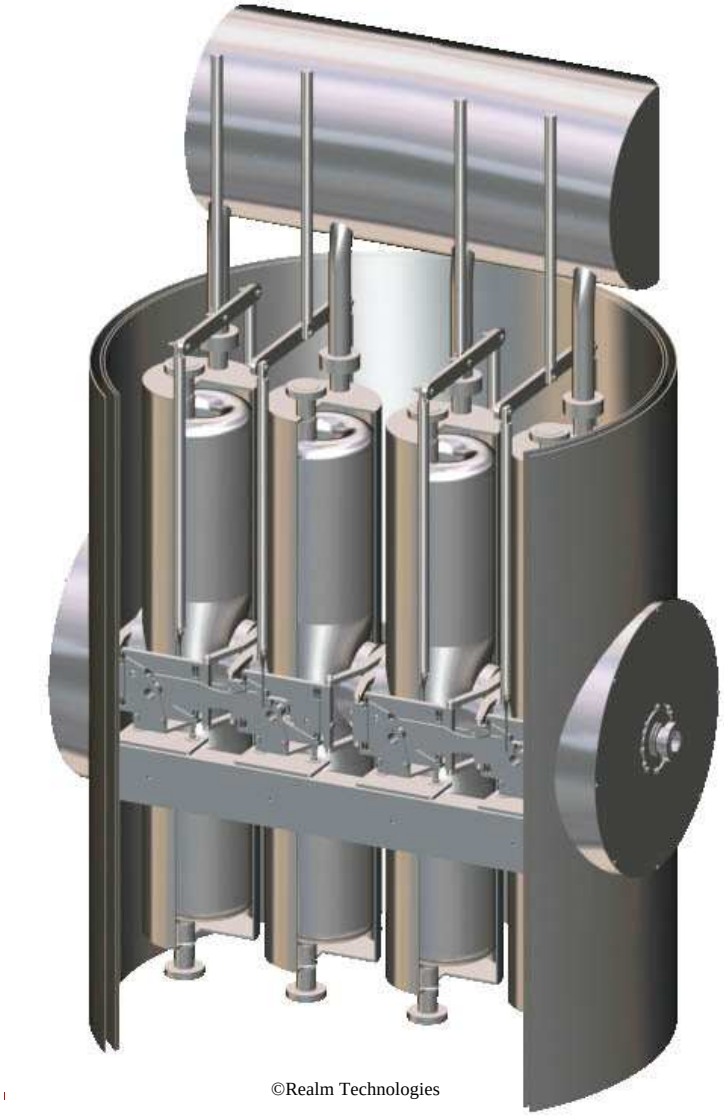

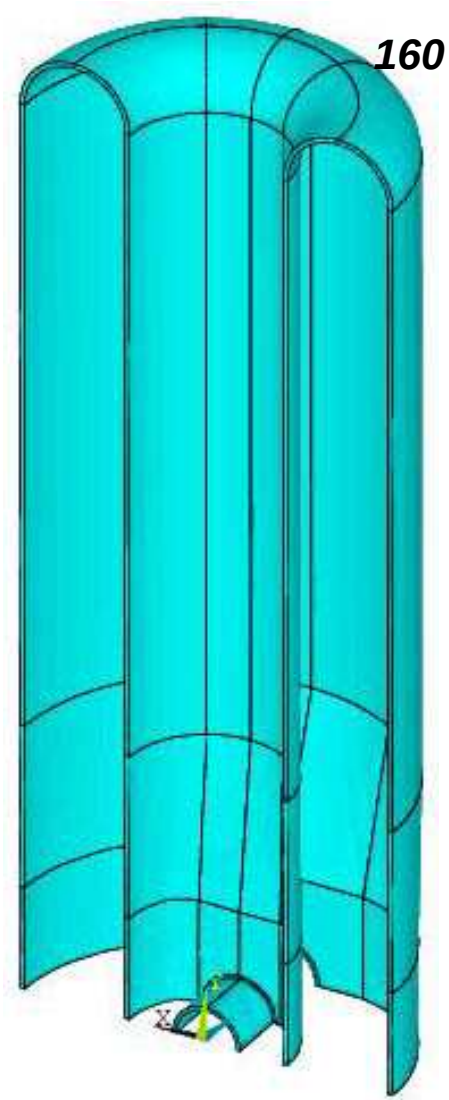

160 MHz , β=0.11

320 MHz , β=0.2

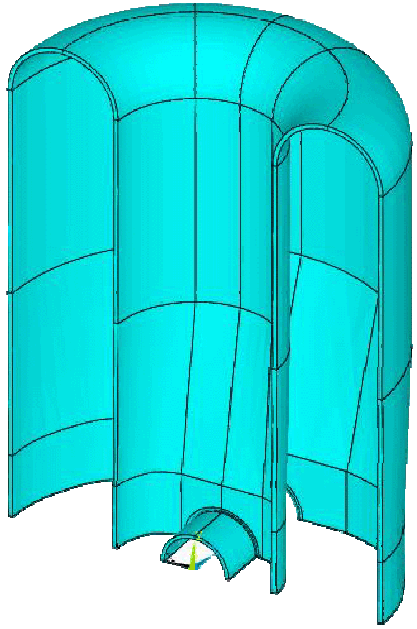

COSY SC LINAC CAVITY TUNER

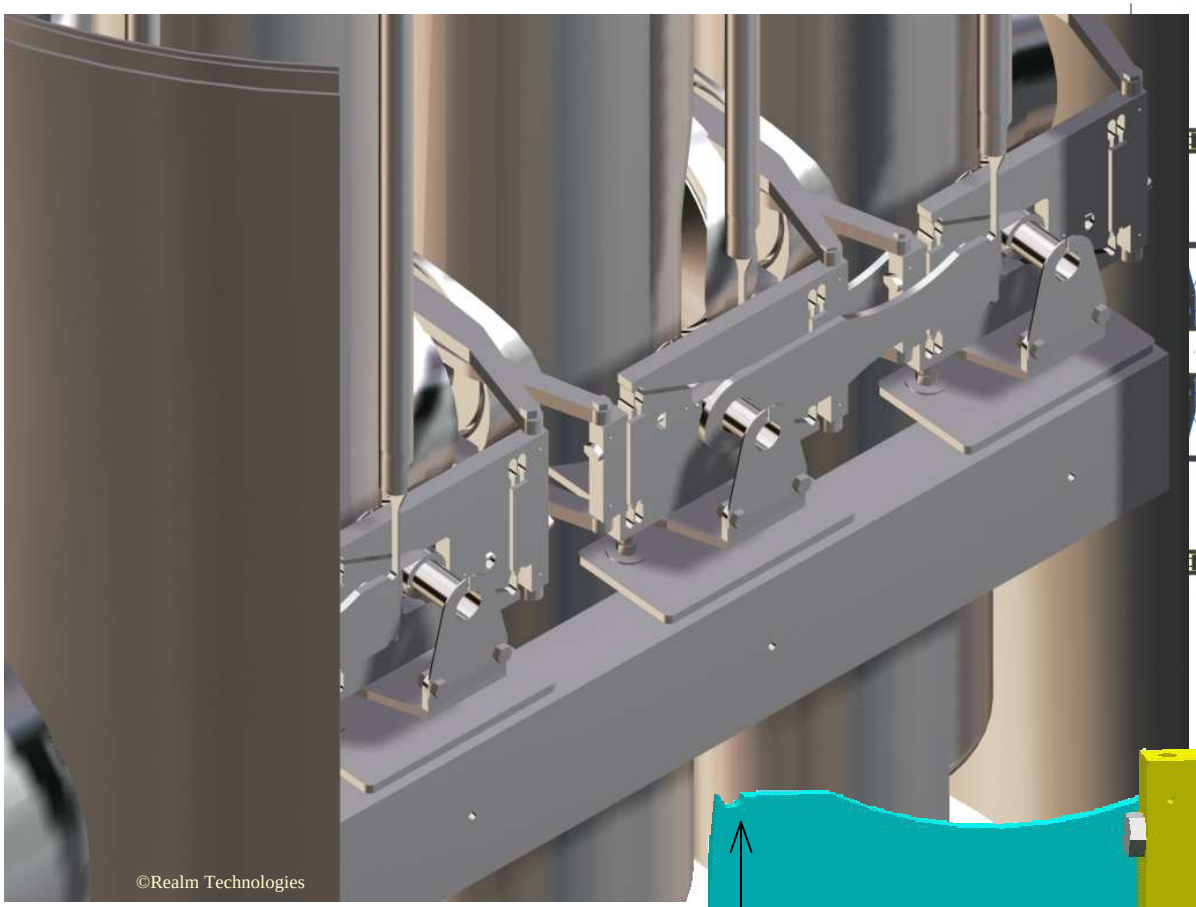

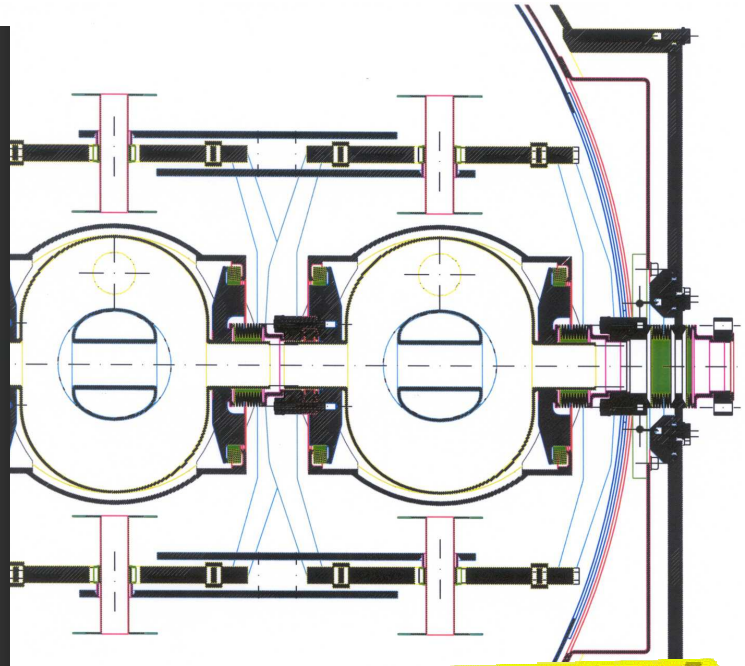

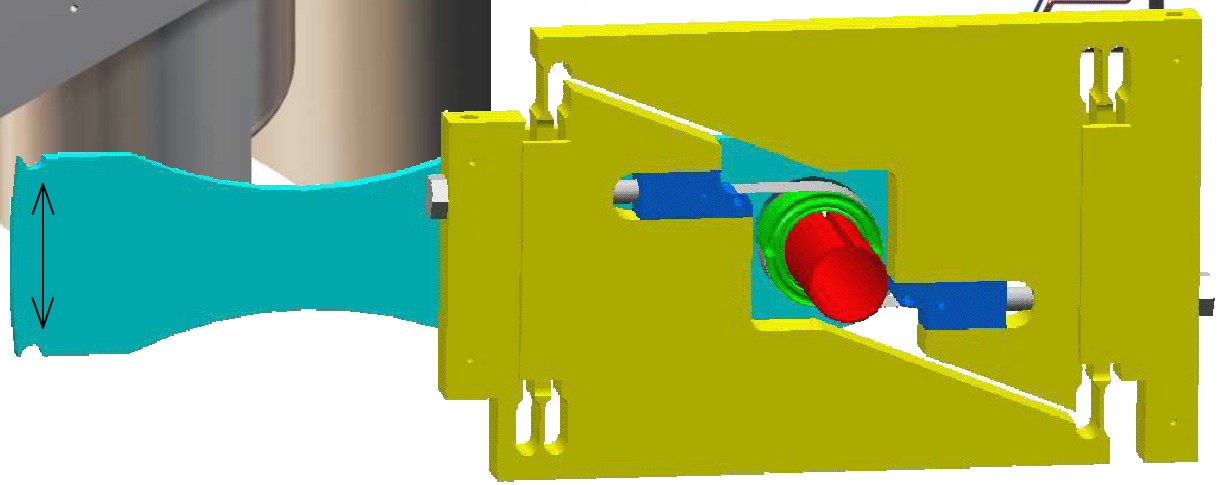

FZJ ELLIPTICAL CAVITY ANALISYS

500 MHz, β=0.75

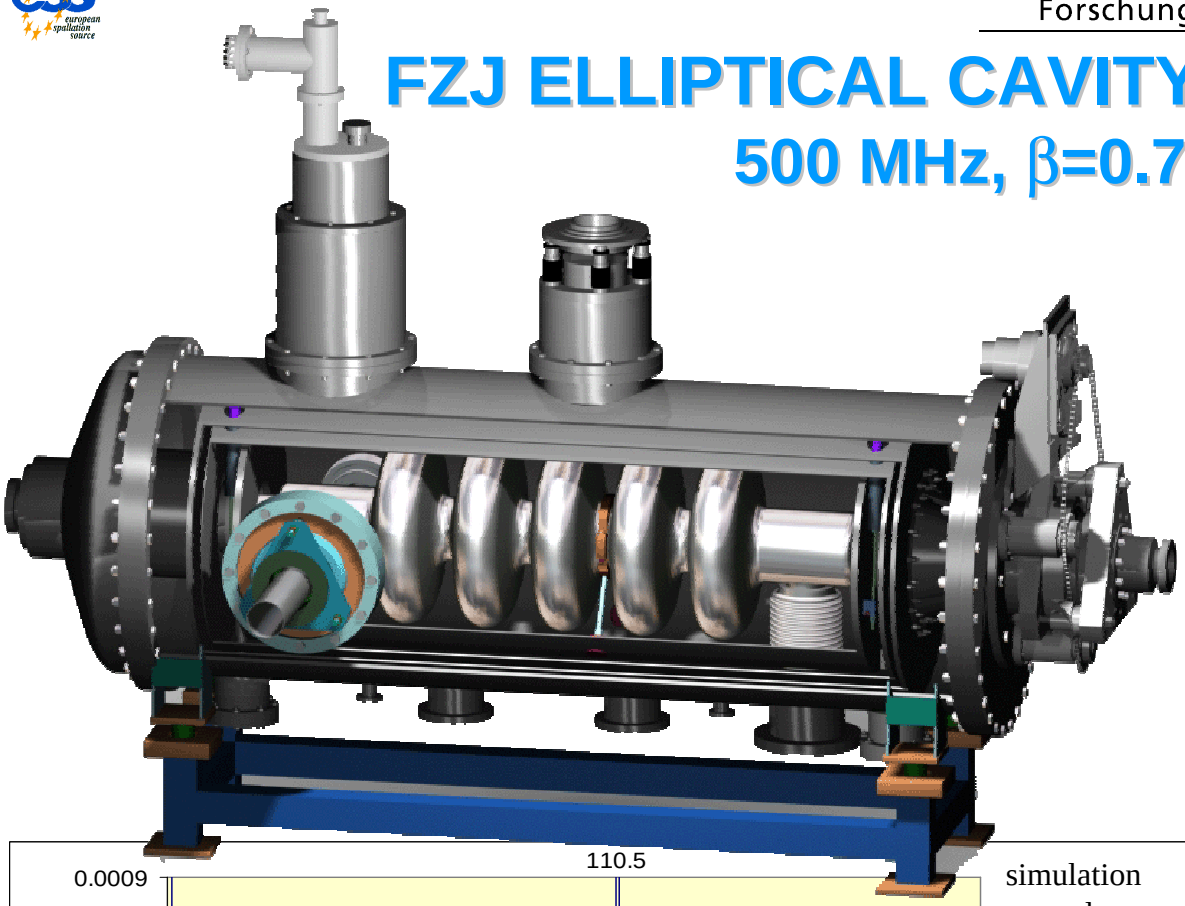

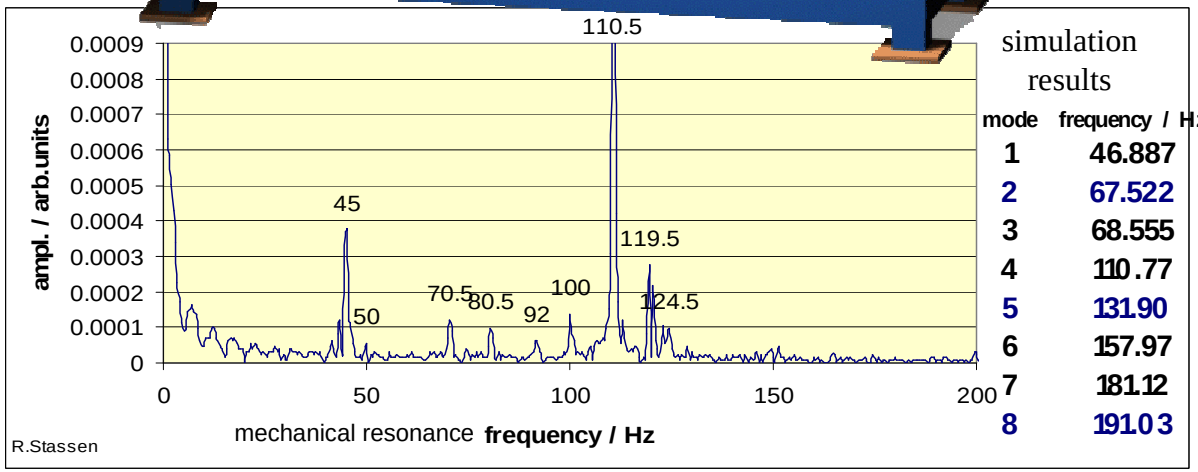

simulation results

mode	frequency / Hz
1	46.887
2	67.522
3	68.555
4	110.77
5	131.90
6	157.97
7	181.12
8	191.03

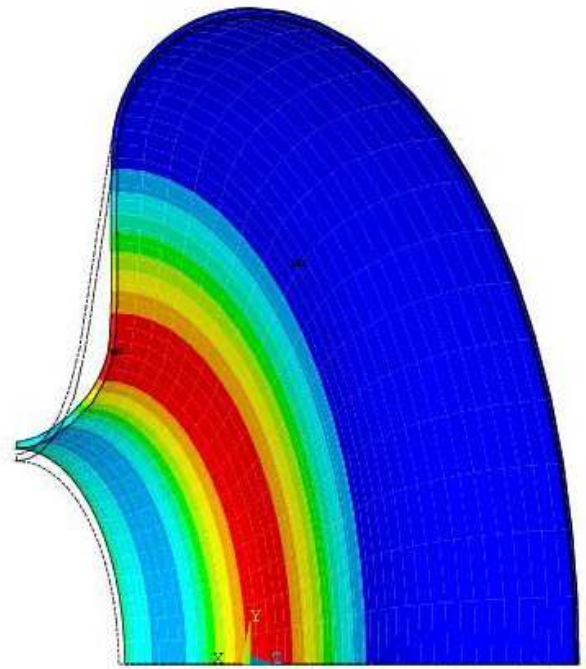

LFD

max displ. 0.00011 mm

k_{calc} = -3.95 Hz/(MV/m)^2

k_{exp} = -3.72 Hz/(MV/m)^2

ESS 352/704 MHz SC Scheme

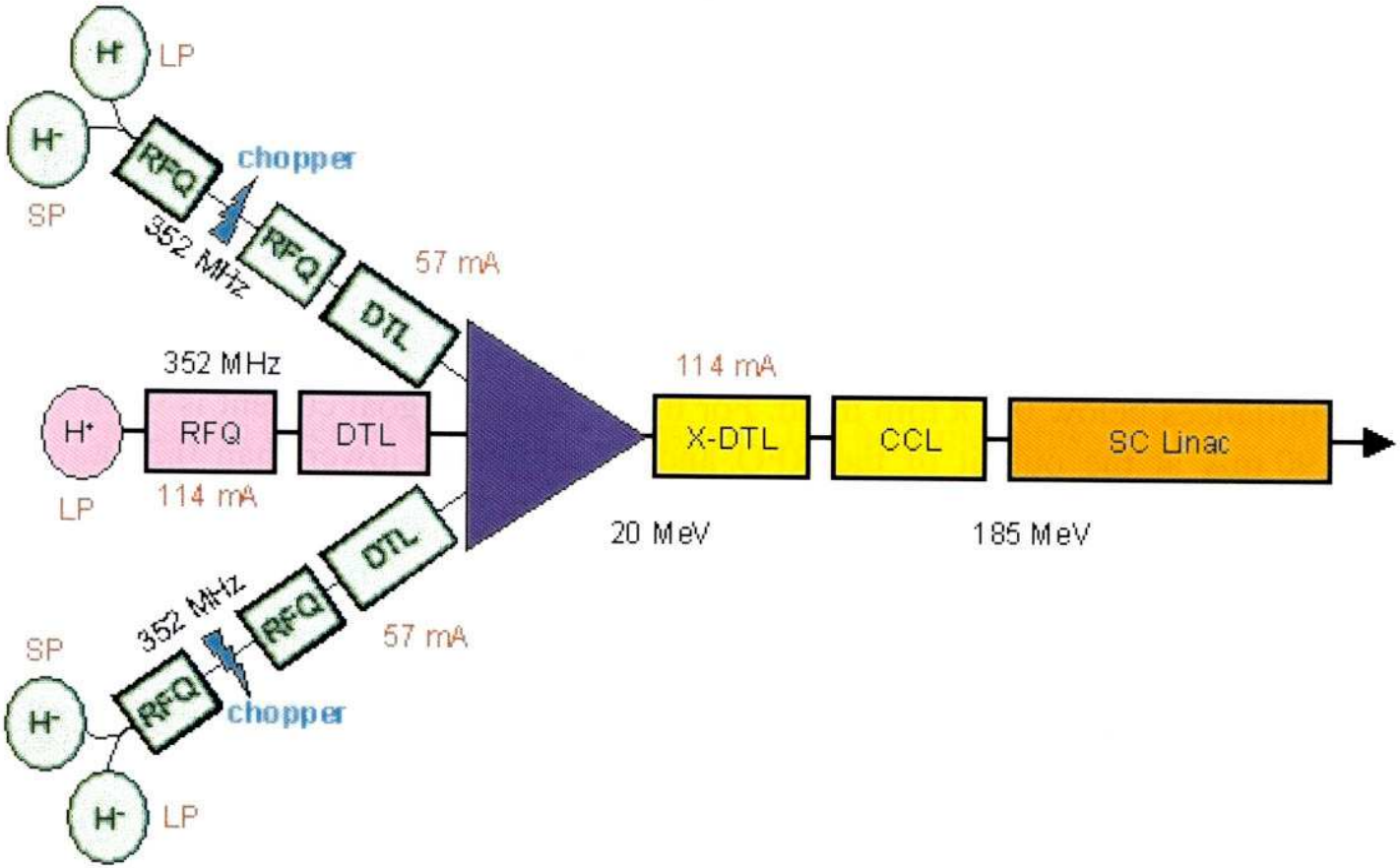

5-GAP H-CAVITY MODEL (500 MHz , β=0.5)

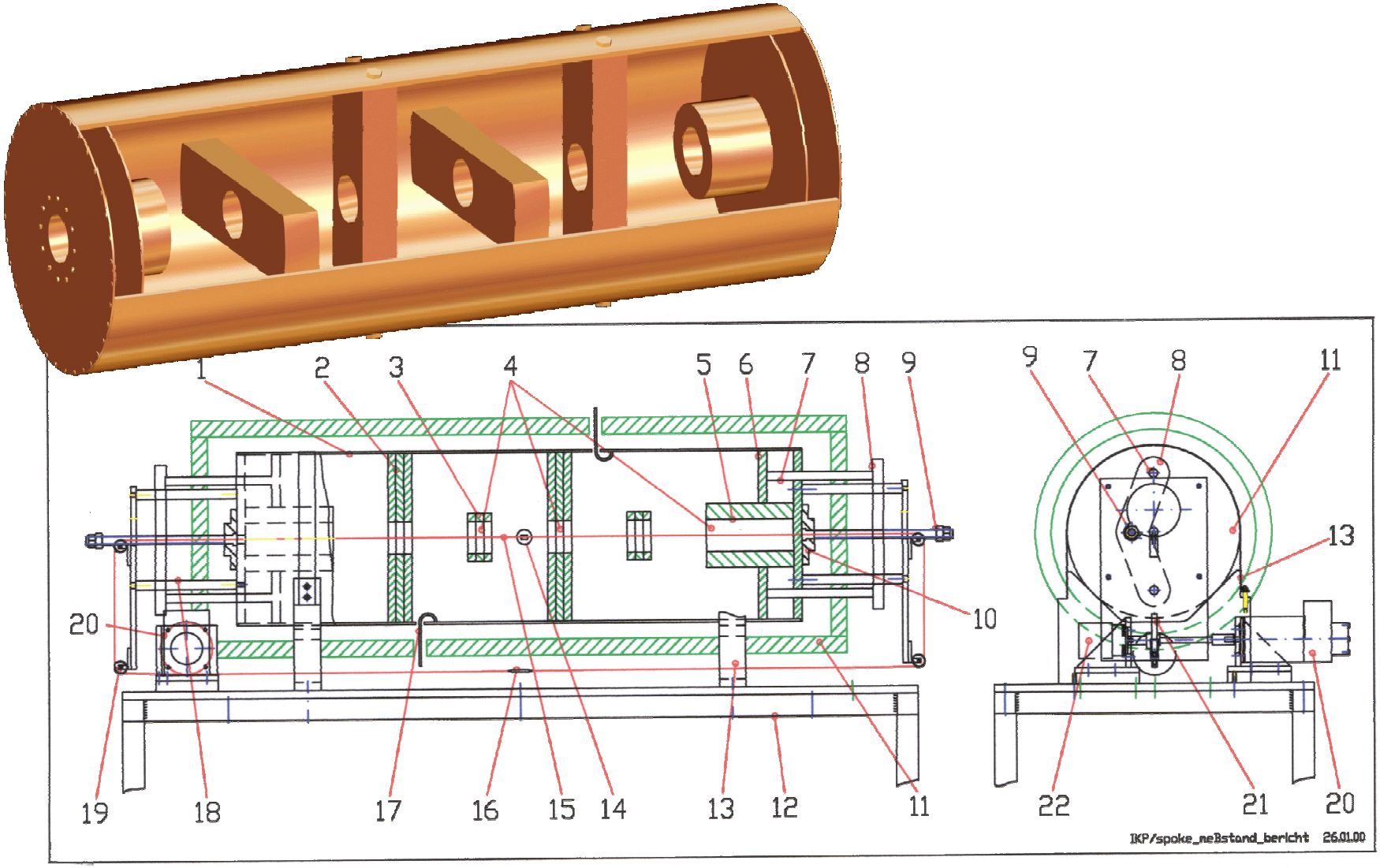

5-GAP H-CAVITY MODEL (500 MHz , β=0.5)

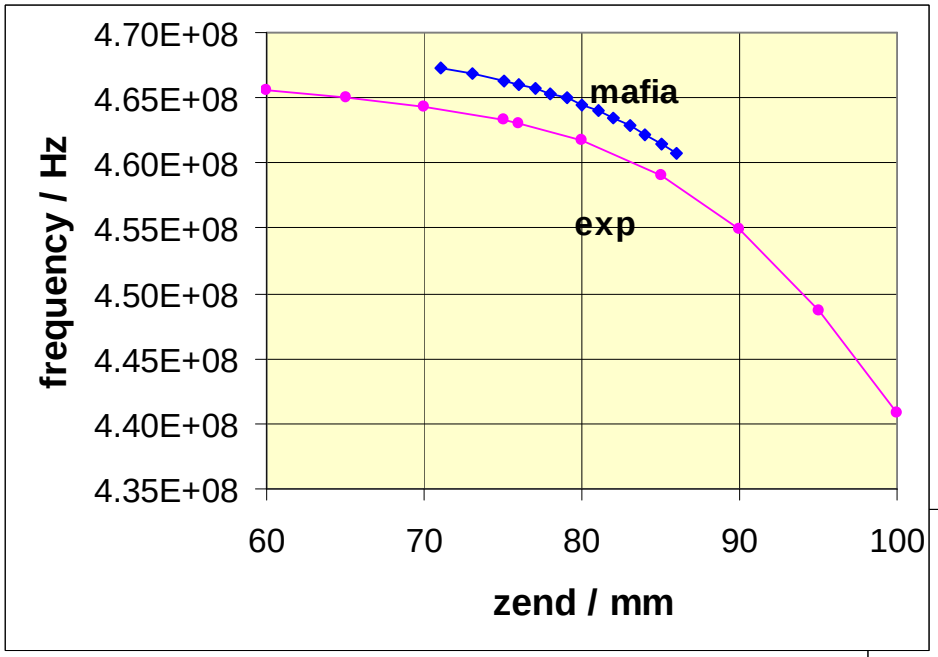

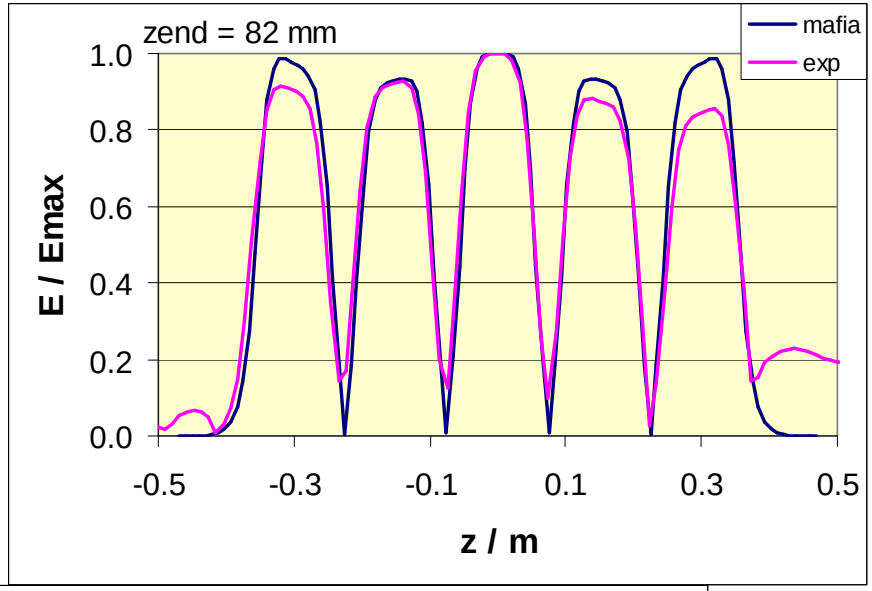

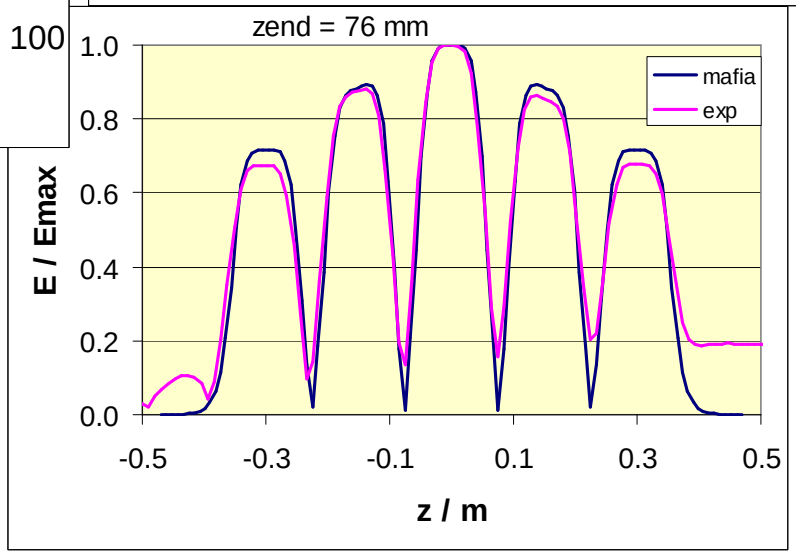

10-Gap SCH-Cavity Copper Model (700 MHz , β = 0.2)

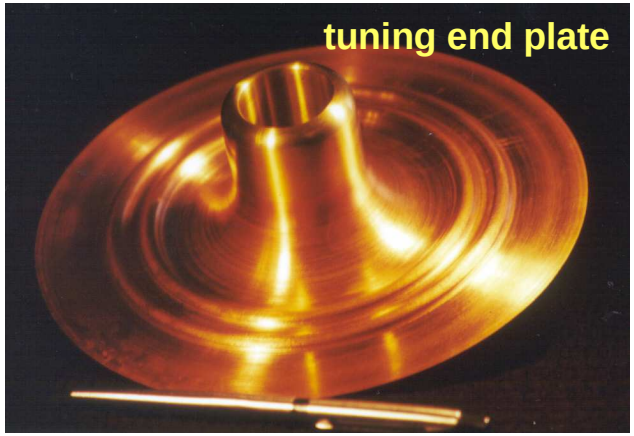

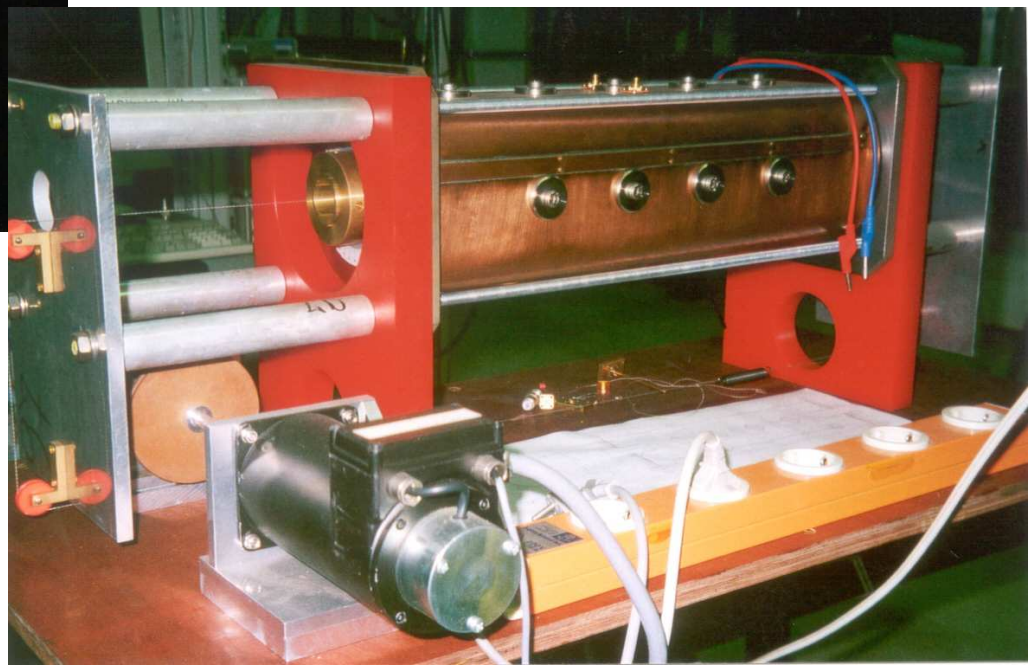

RF Measurement Goals:

1. 3D Simulation Verification

2. Cavity Tuning Investigation

10-Gap SCH-Cavity Copper Model (700 MHz , β = 0.2)

Frequency vs. last acc. gap change

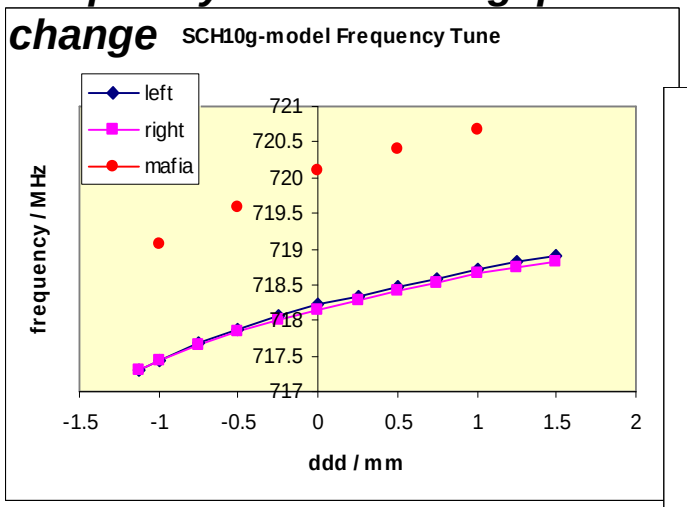

Acc. Field along Beam Path RF Measurements

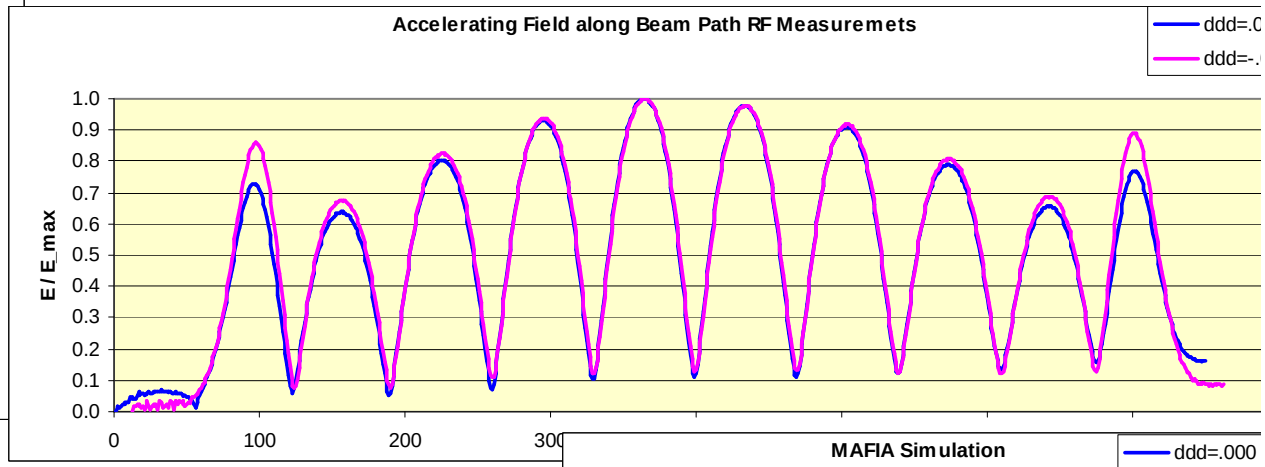

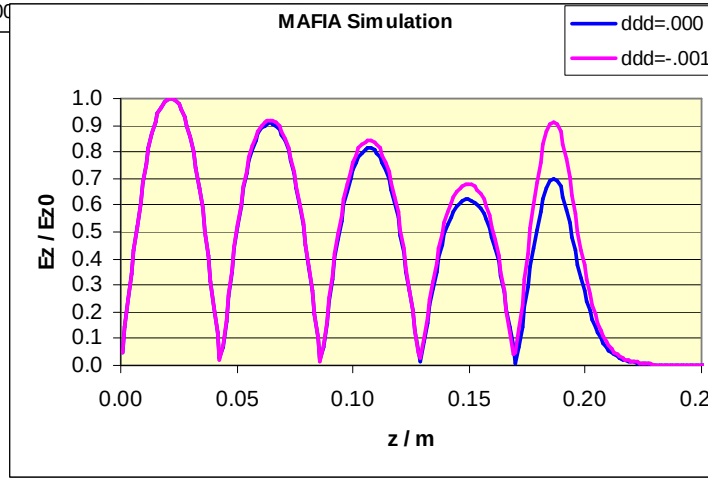

Frequency shift vs. last acc. gap change

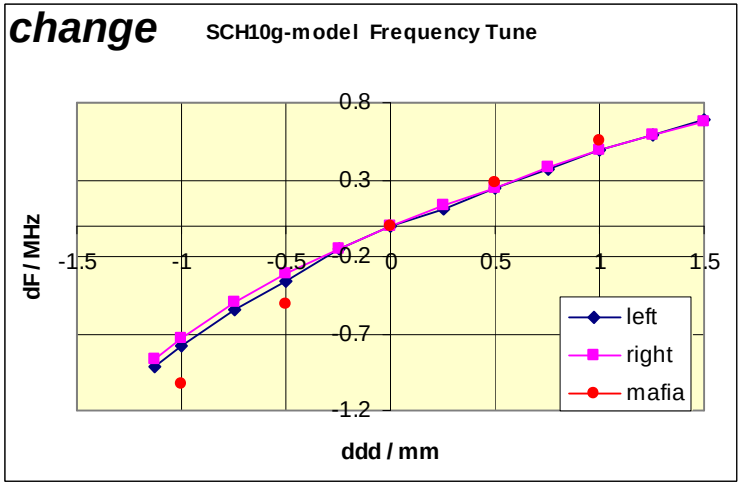

SC 4-GAP H-CAVITY (700 MHz , β=0.2)

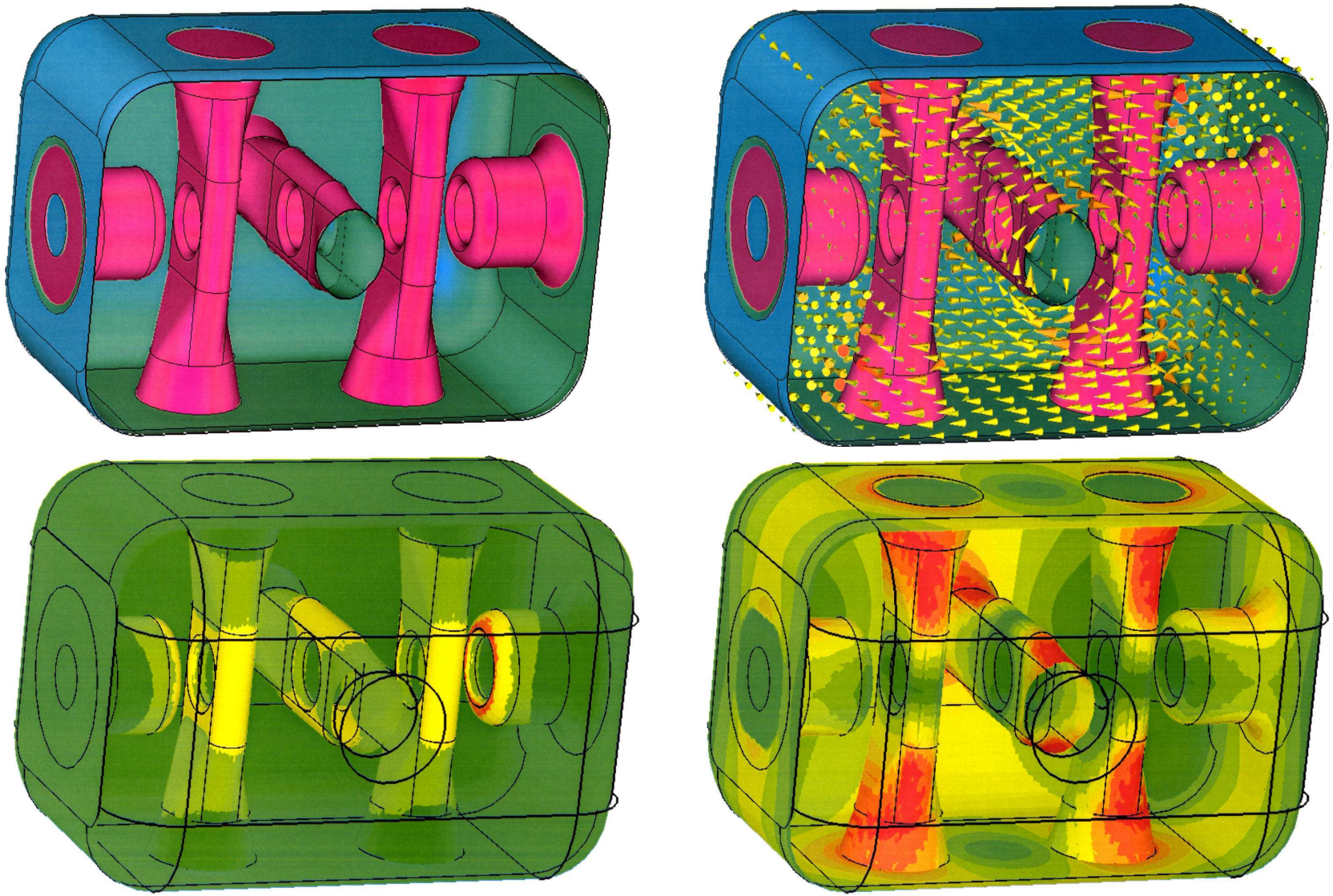

magnetic rf field

electric rf field

surface rf

SC 4-GAP H-CAVITY (700 MHz , β=0.2)
cavity tune

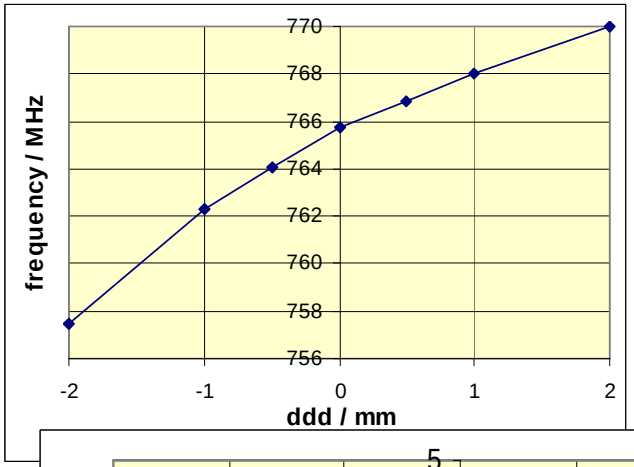

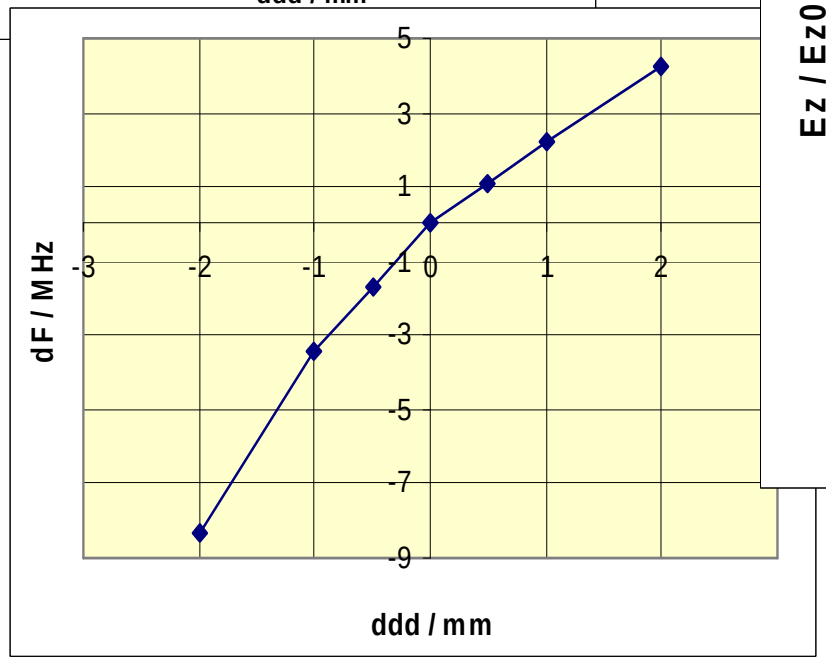

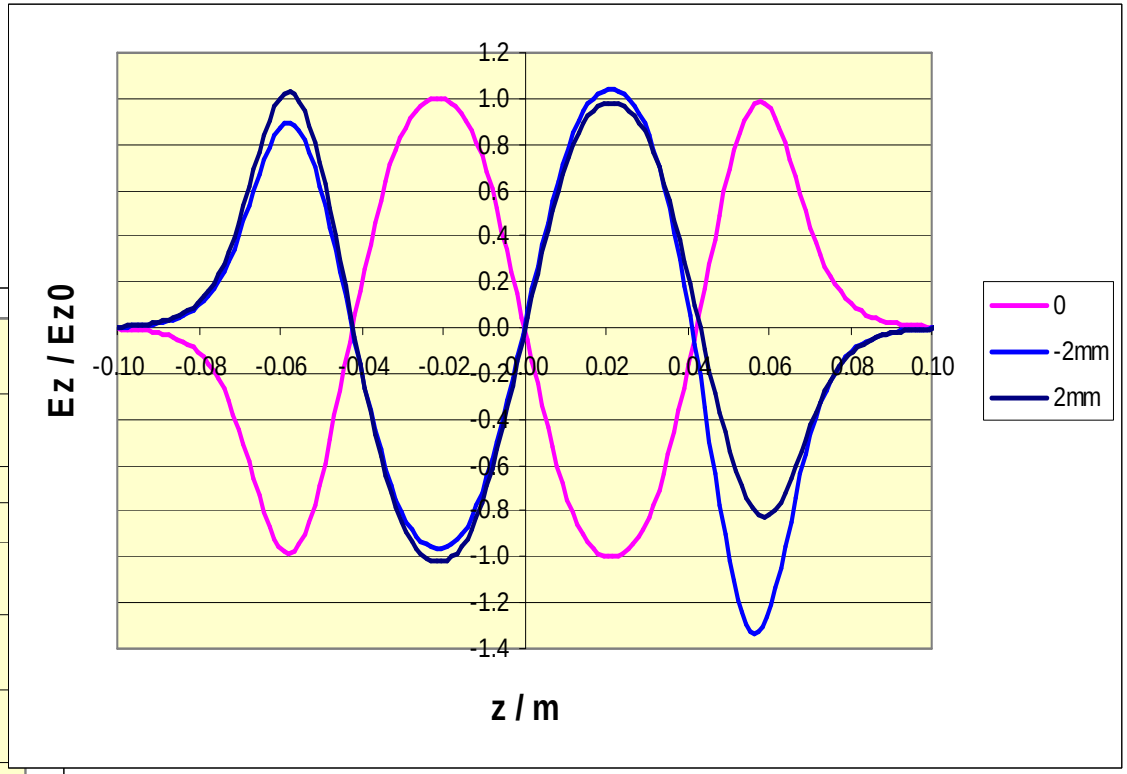

SC 4-GAP H-CAVITY IN CRYOMODULE (700 MHz , β=0.2)

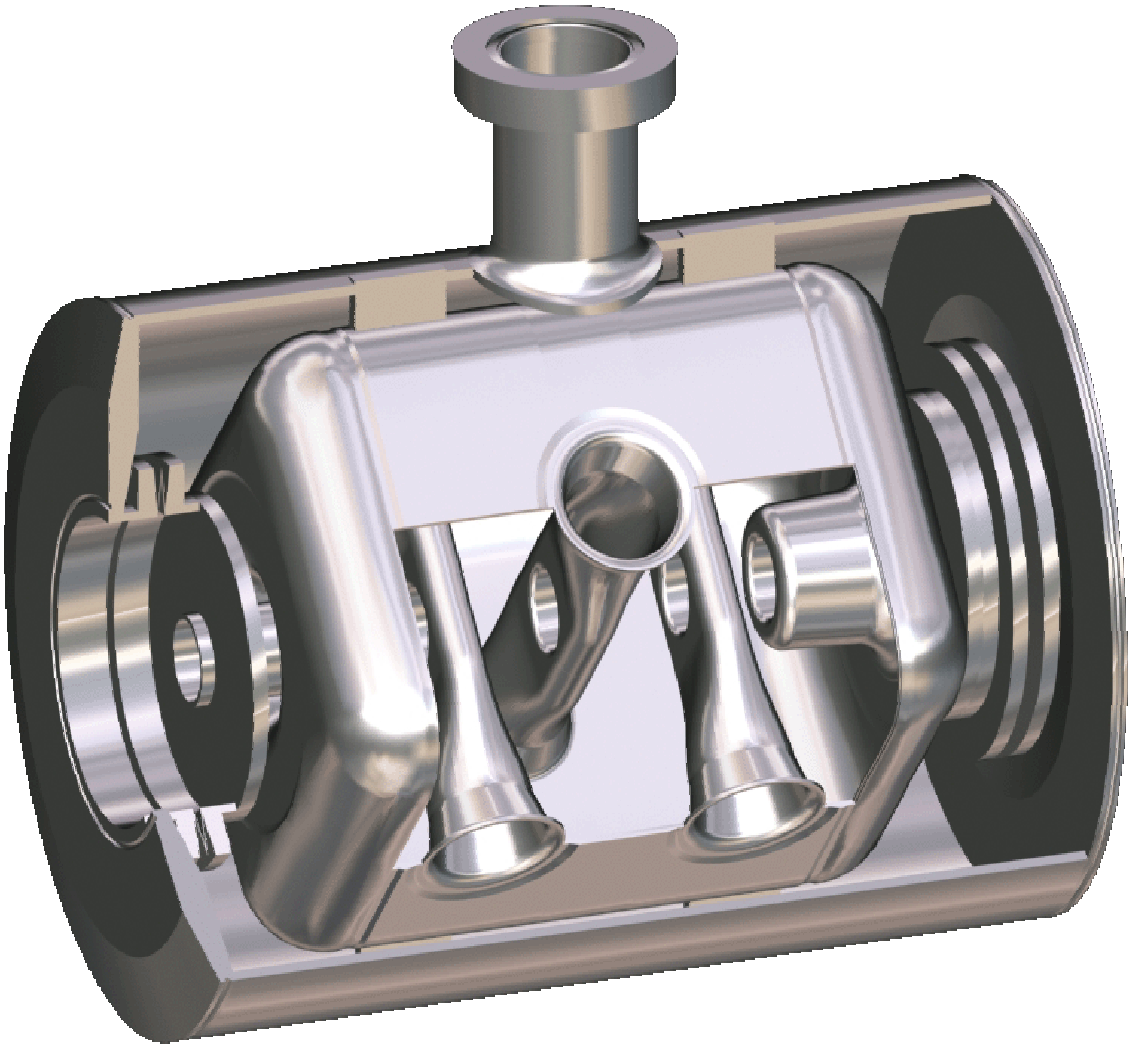

SC 4-GAP H-CAVITY (700 MHz , β=0.2)

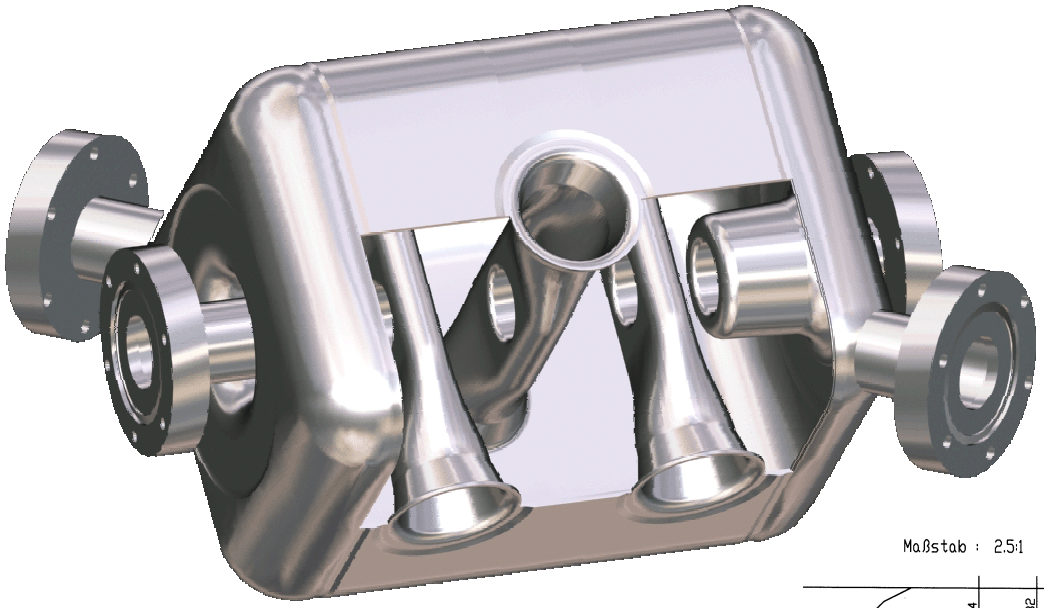

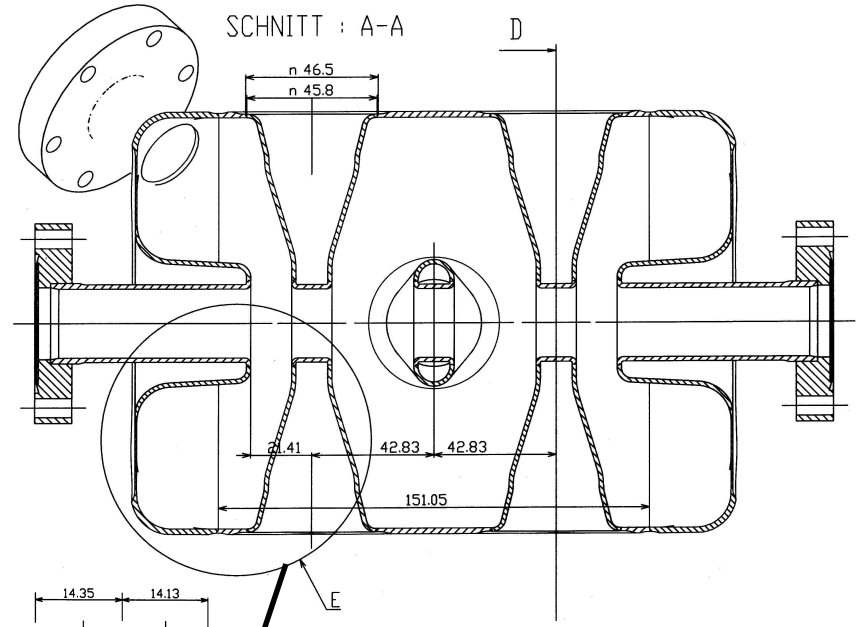

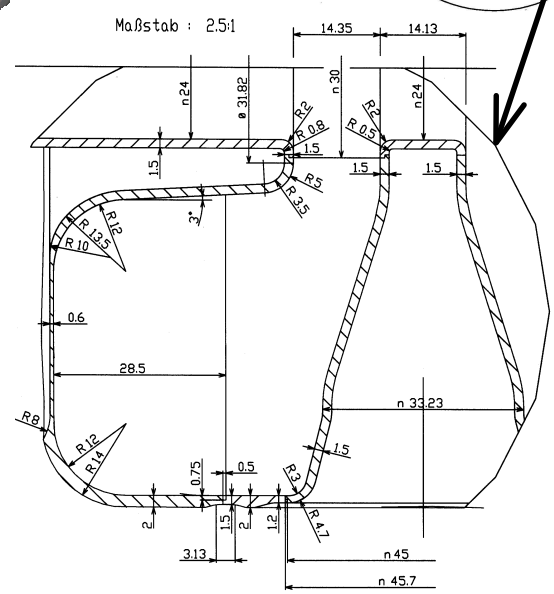

Frequency	MHz	775
β=v/c		0.2
R aperture	cm	1.5
βλ/2	cm	4.283
R_{cav}	cm	7.15
E_{pk} / E_{acc}		4.93
B_{pk} / E_{acc}	mT/MV/m	8.17
B_{pk} / E_{pk}	mT/MV/m	1.66

TUNING PLATE

geometry

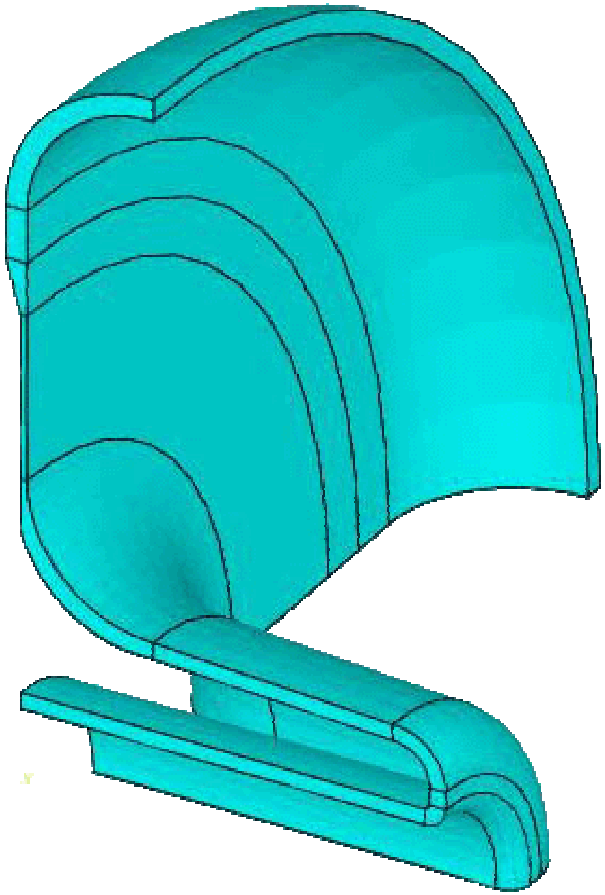

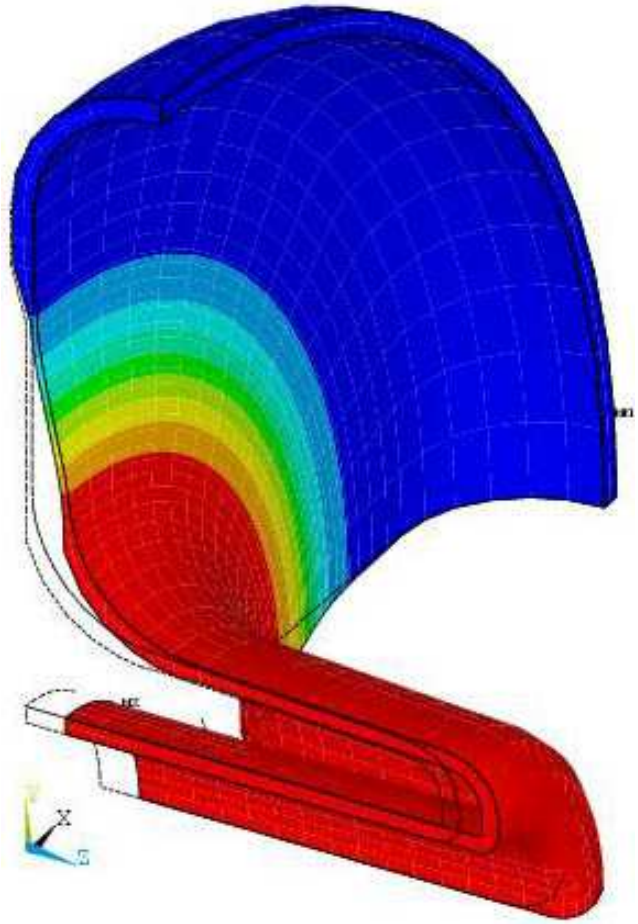

deformation by tuning

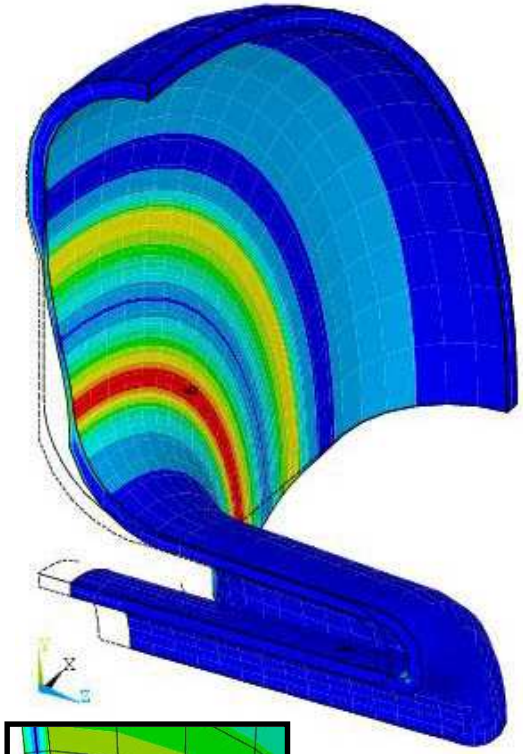

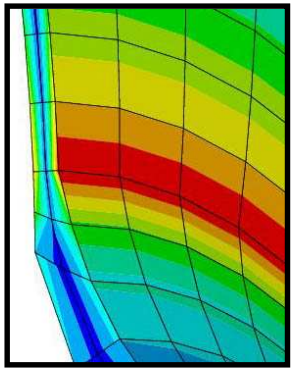

Stress von Mises

TUNING PLATE

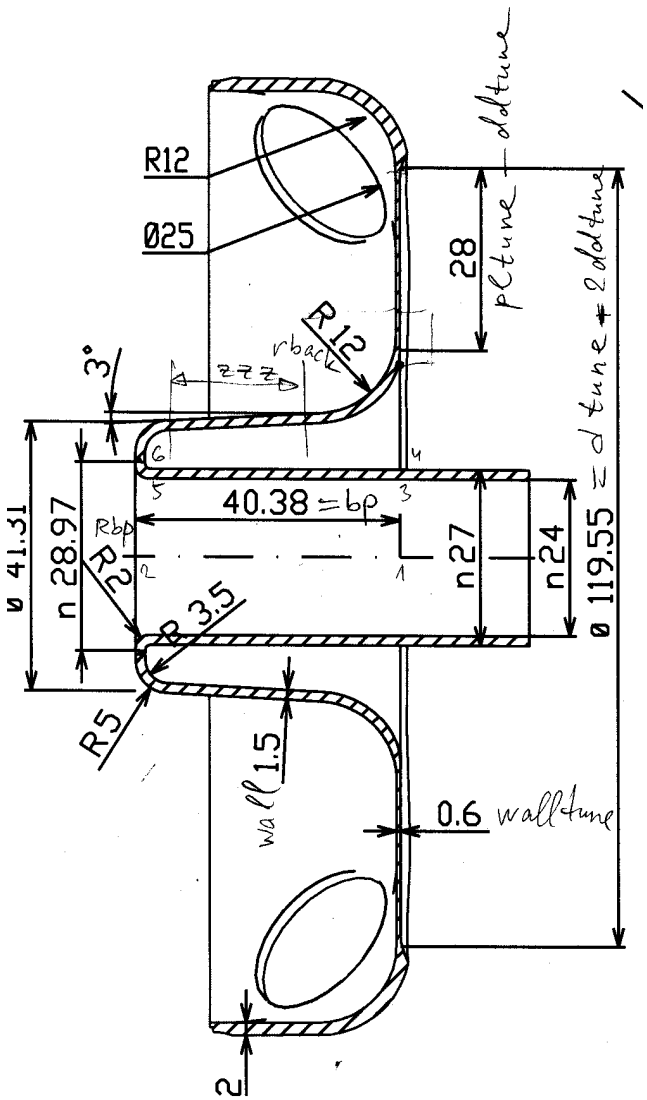

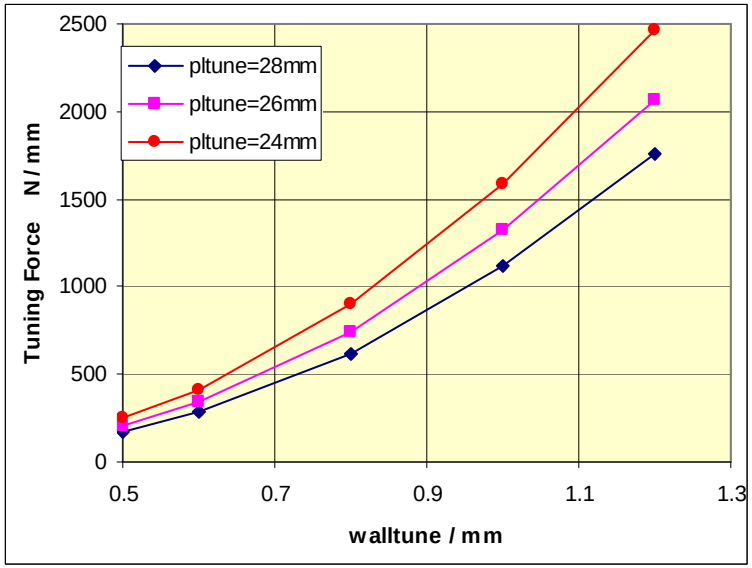

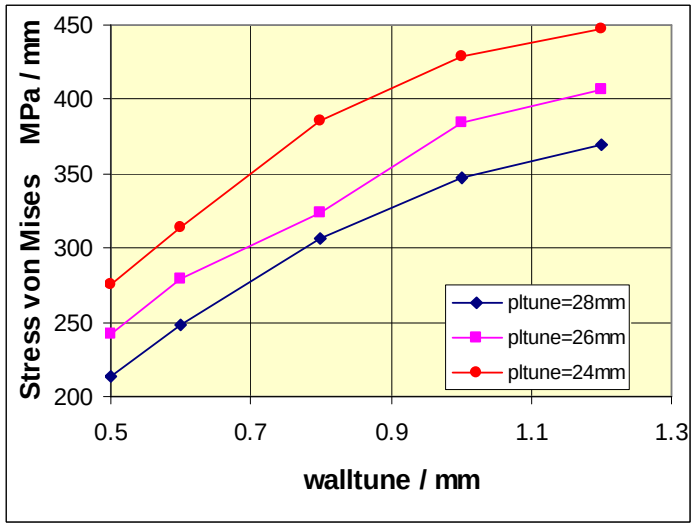

MECHANICS

LHe pressure 1 bar

Spokes (0.00475 mm)

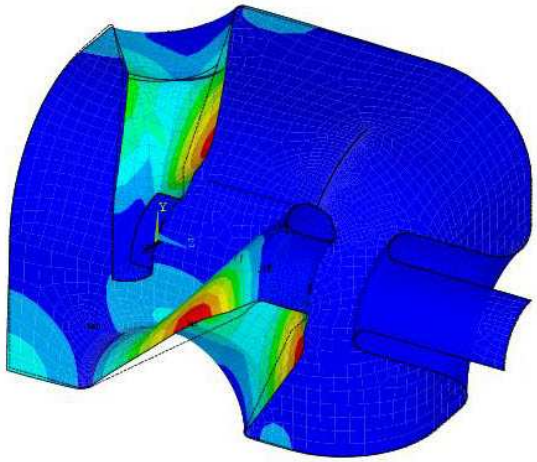

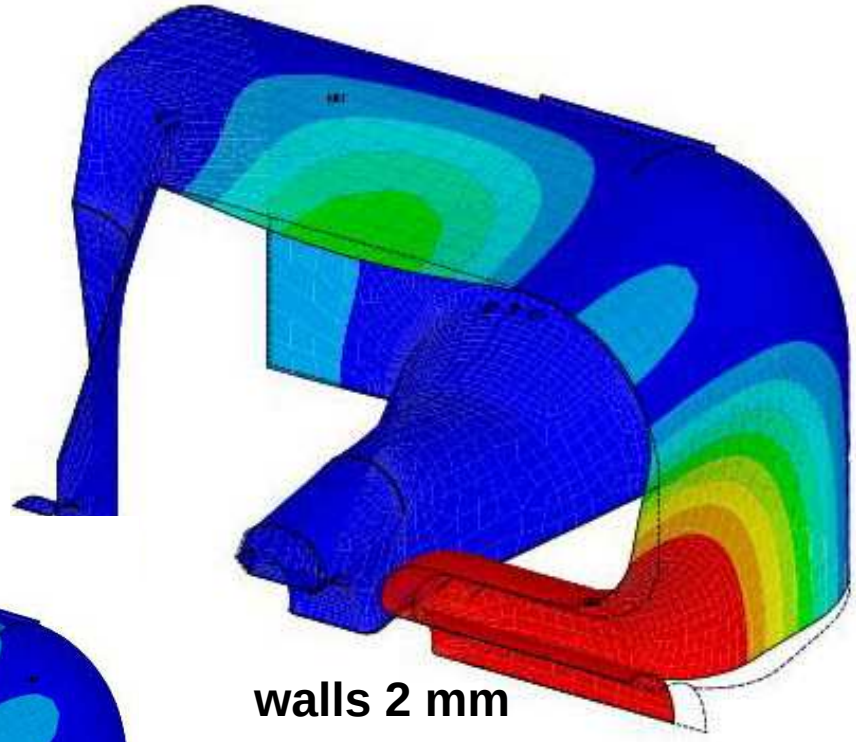

walls 2 mm

Spokes+Walls+End Electrode

max deformation 0.149 mm

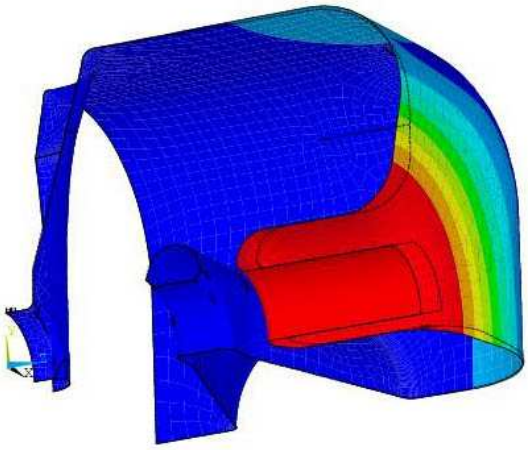

Spokes + End Electrode (0.0912 mm – 319 kHz)

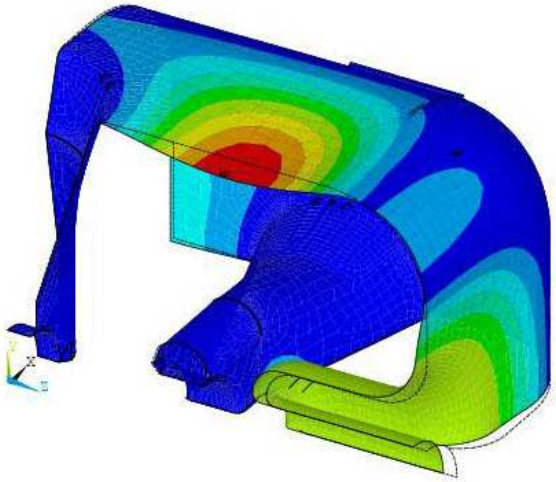

Spokes + Walls (0.0875 mm – 26.8 kHz)

frequency shift 494.2 kHz

MECHANICS

CAVITY COOL-DOWN
20^0 C => -271^0 C

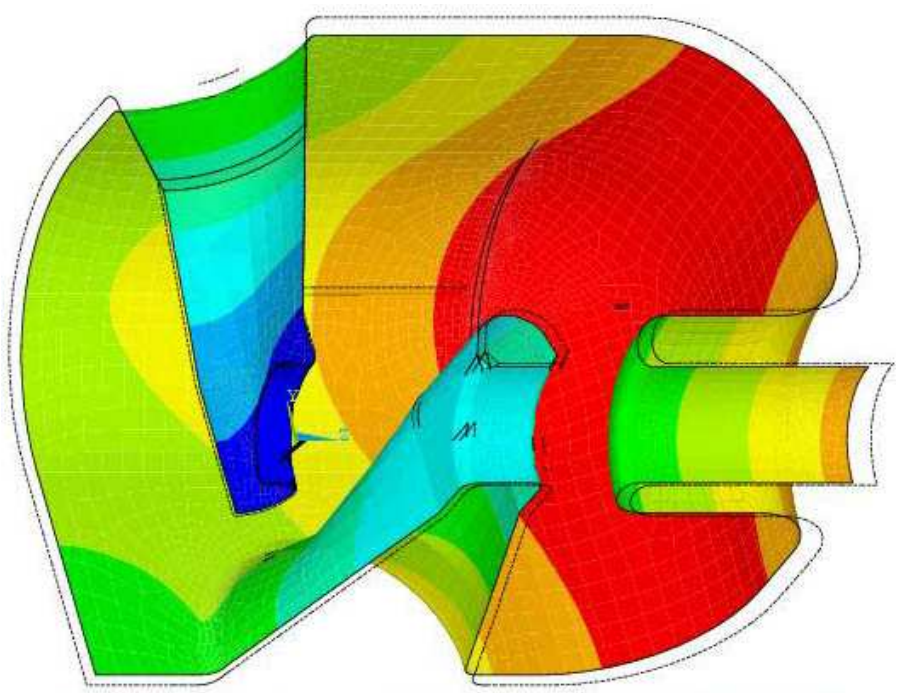

walls 2 mm

max deformation 0.237 mm frequency shift 3.4 MHz

CAVITY COOL-DOWN + LHe PRESSURE
1 bar & 20^0 C => -271^0 C

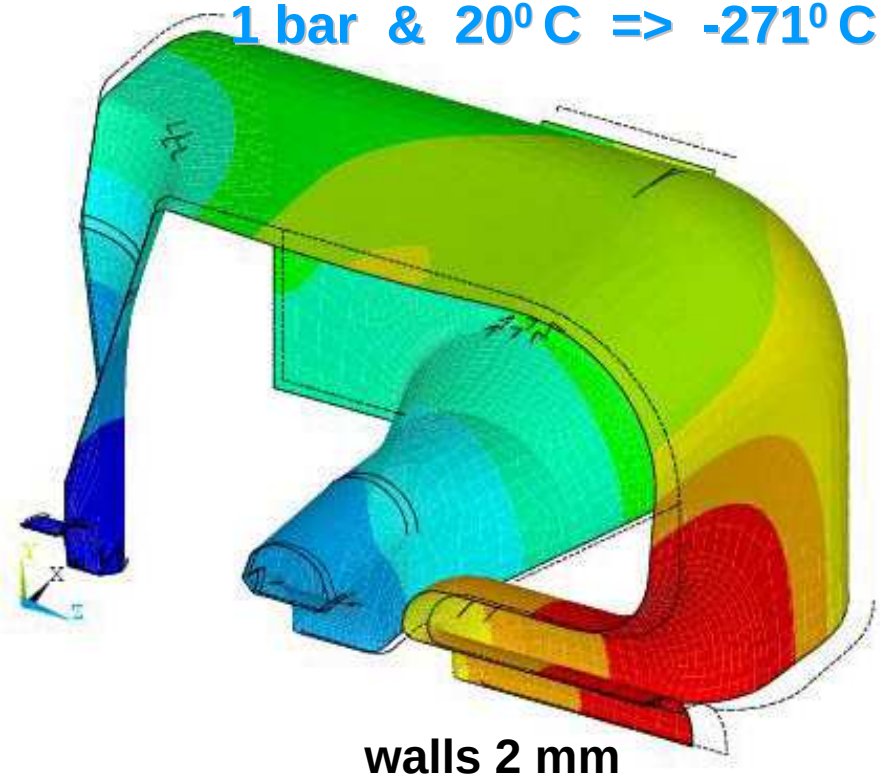

walls 2 mm

max deformation 0.361 mm frequency shift 3.88 MHz

LORENZ FORCE PRESSURE

$P=\mu_0 H^2-\varepsilon_0 E^2$

X-plane

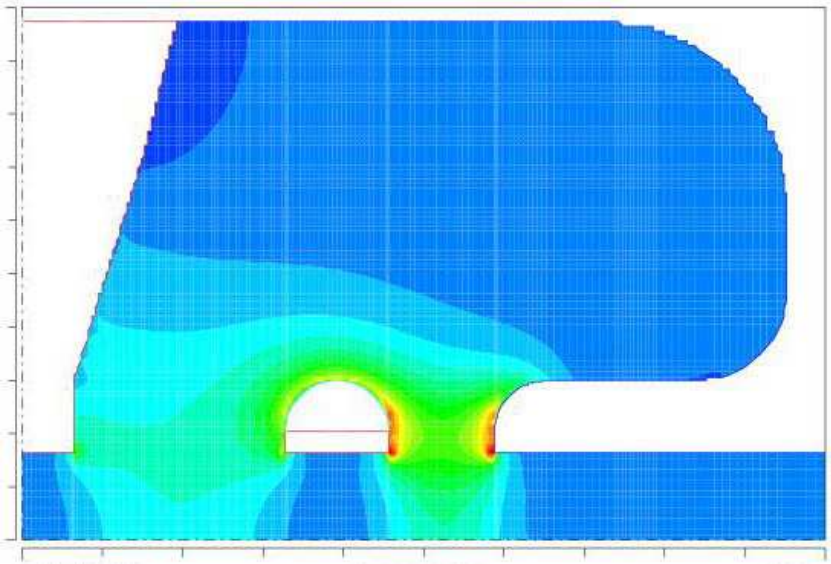

Y-plane

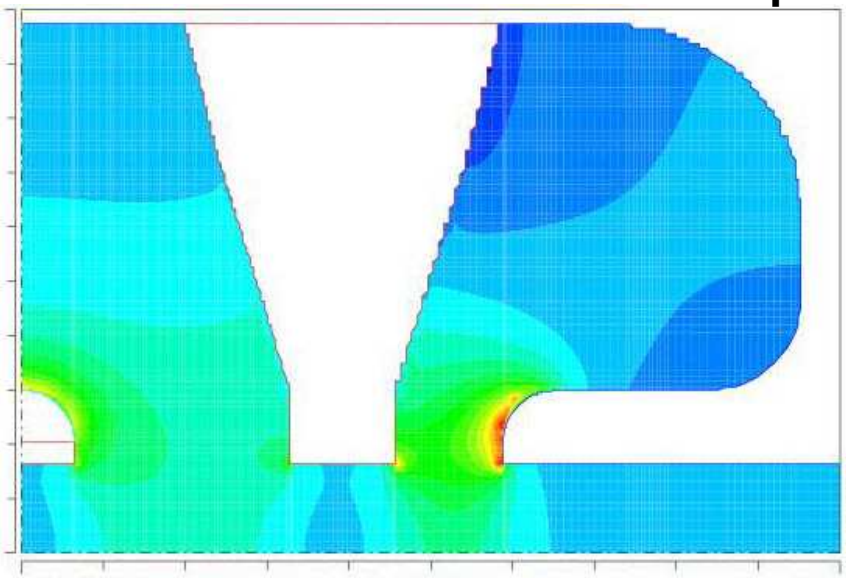

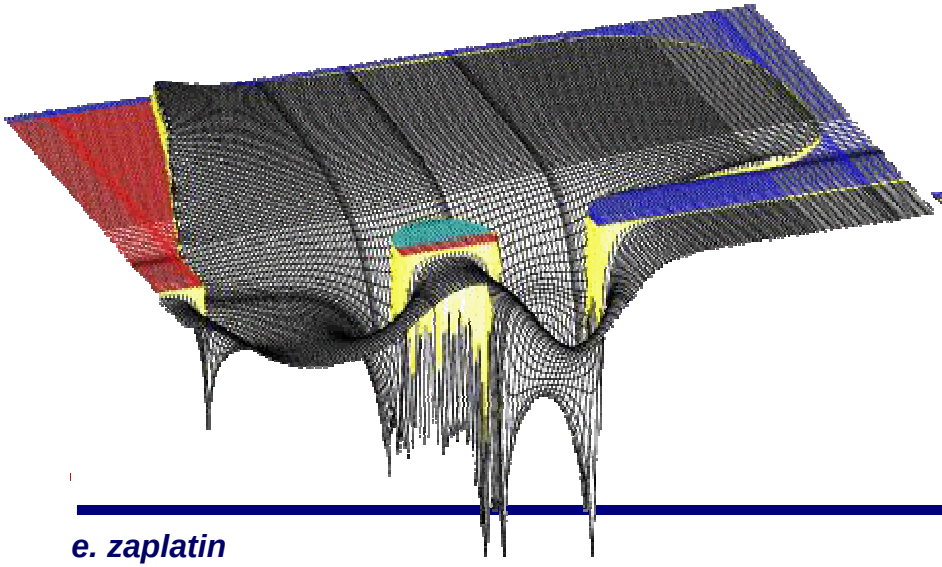

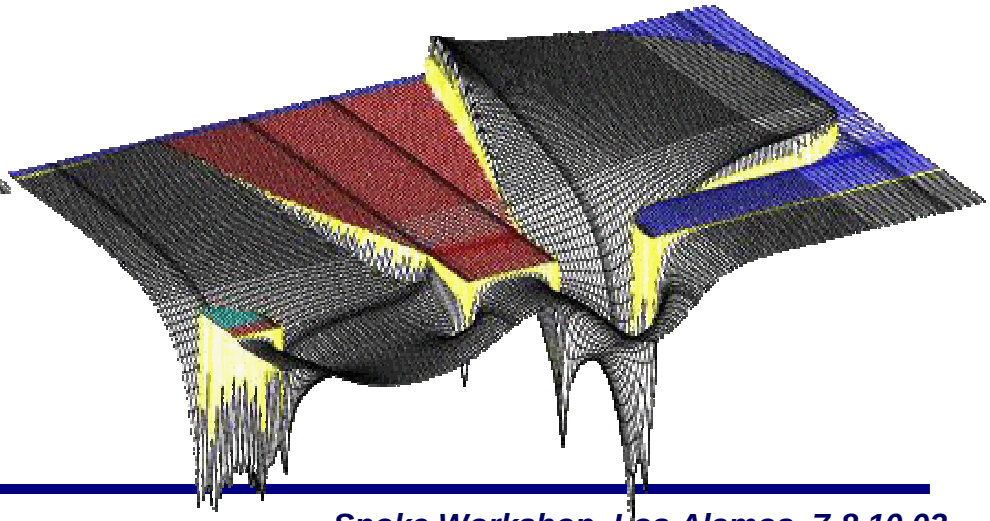

LORENZ FORCE PRESSURE

$$P=\mu_0 H^2-\varepsilon_0 E^2$$

mid-spoke **side-spoke**

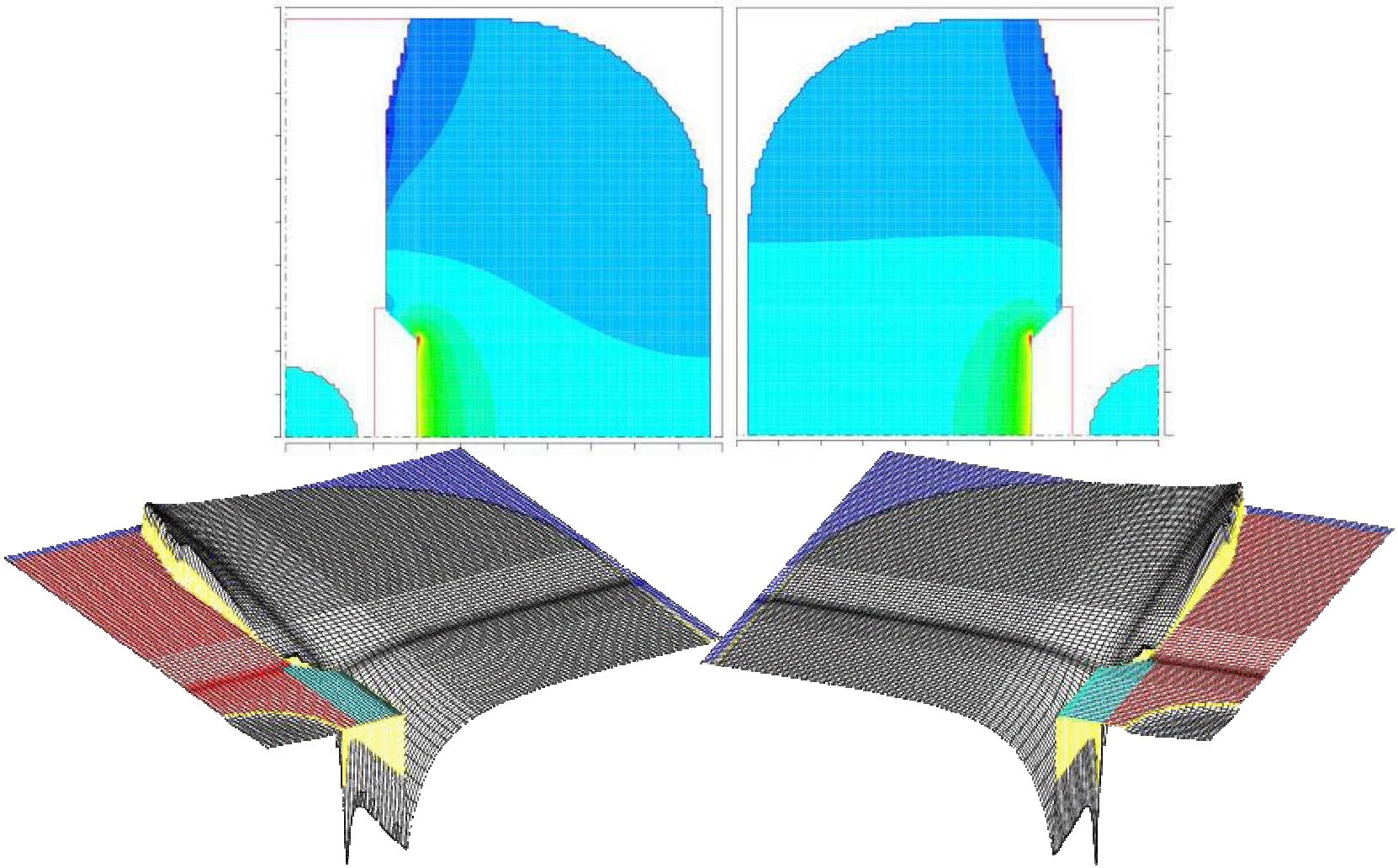

LORENZ FORCE DETUNING (B_{pk}=80 mT)

Mid-Spoke (0.0223 μm)

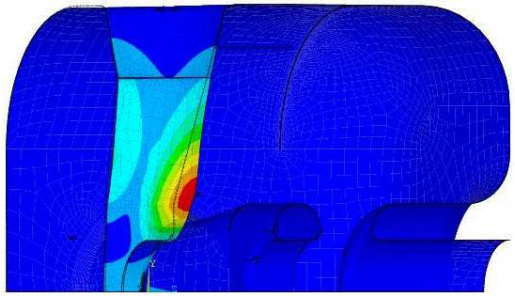

Spokes (0.478 μm)

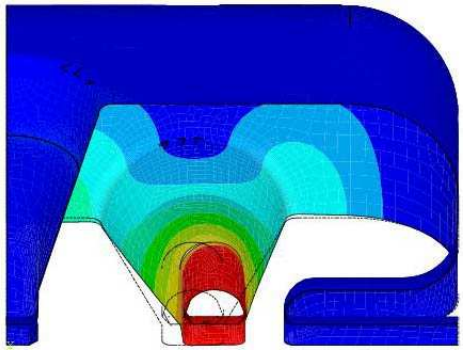

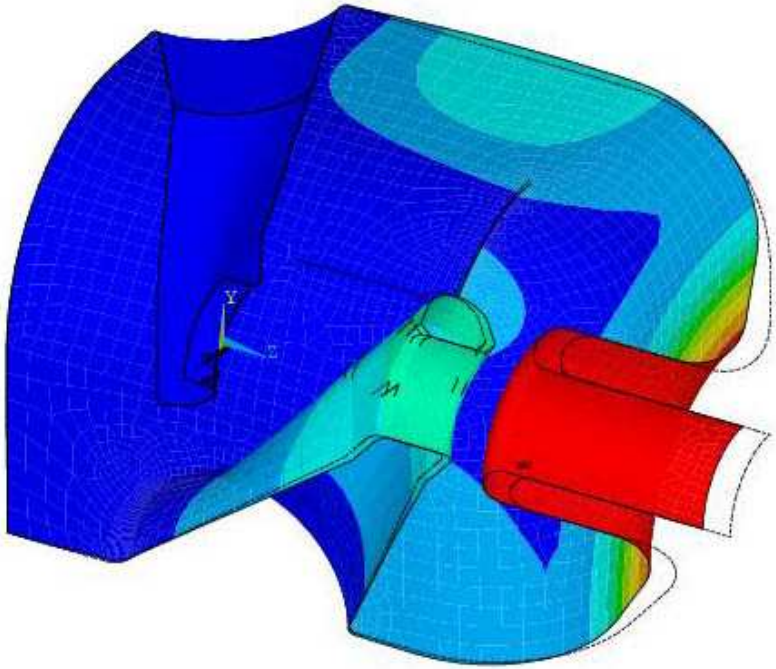

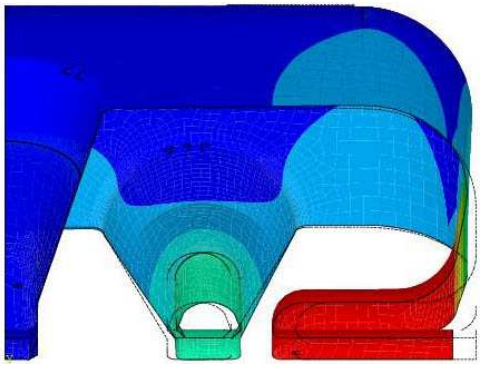

Spokes + End Electrode (1.24 μ

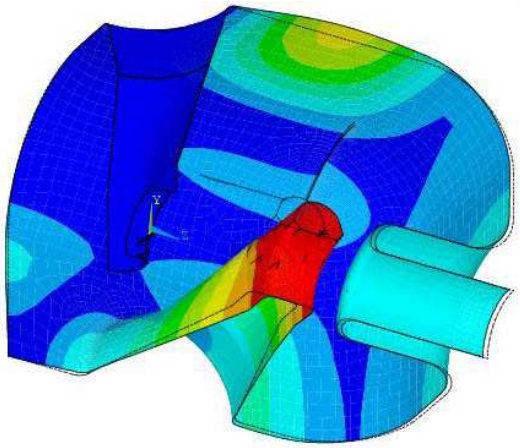

Spokes + Walls (0.414 μm)

walls 2 mm

Spokes+Walls+End Electrode

max deformation 1.31 μm

frequency shift 46 Hz/(MV/m)^2

MECHANICS - MODAL ANALISYS

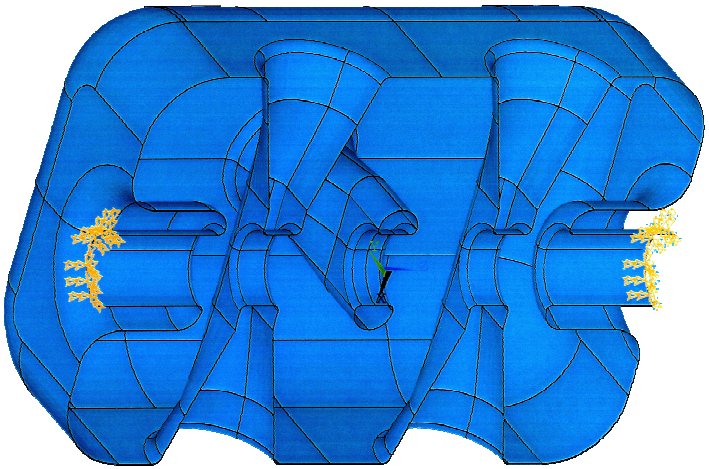

mode	freq / Hz
1	248.33
2	292.08
3	329.09
4	334.22
5	413.26

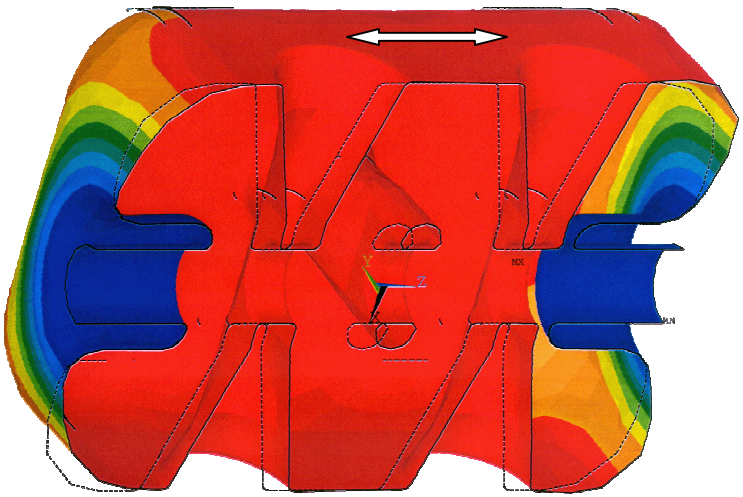

mode 1 - longitudinal

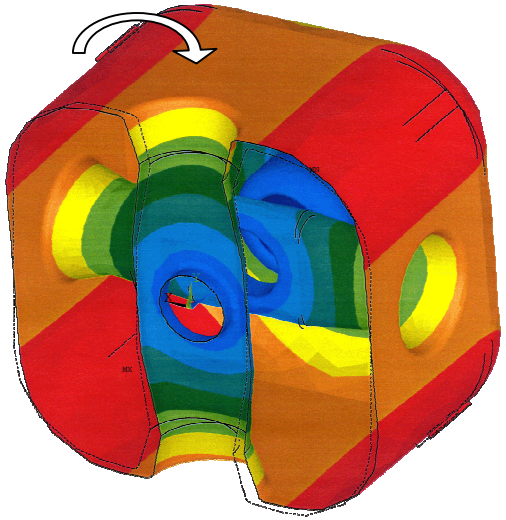

mode 2 - torsion

SC 4-GAP H-CAVITY (700 MHz , β=0.2)
dismountable tuning plate joint

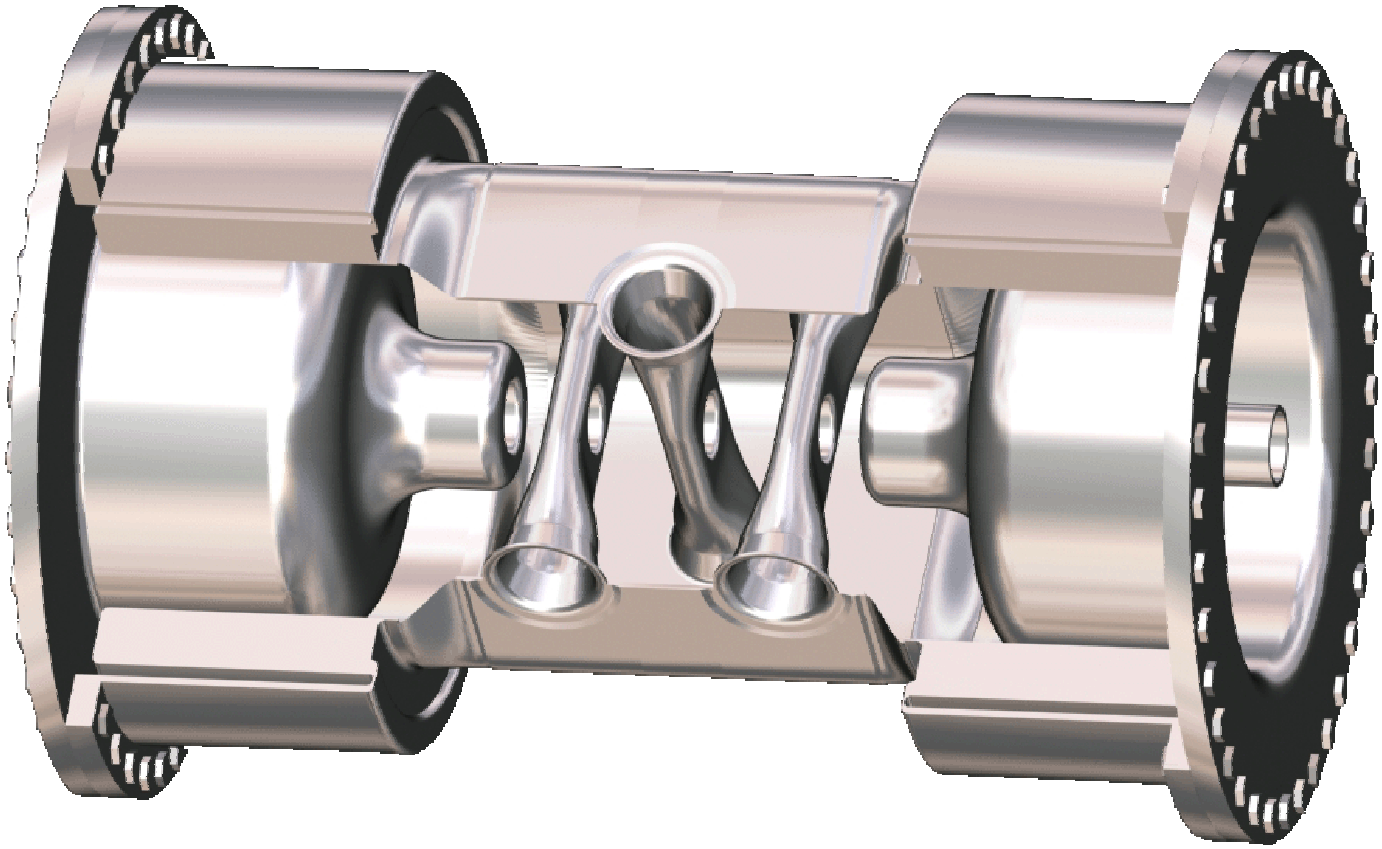

SC 4-GAP H-CAVITY (700 MHz , β=0.2)
dismountable tuning plate joint

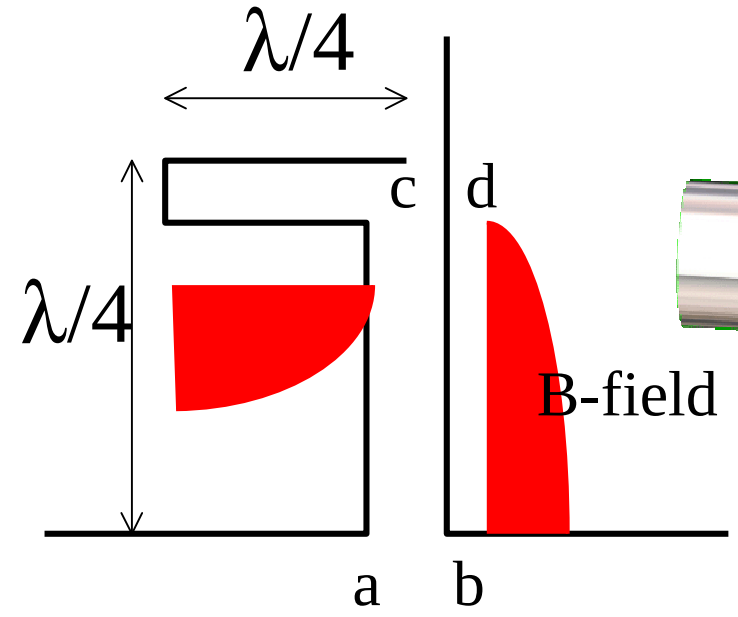

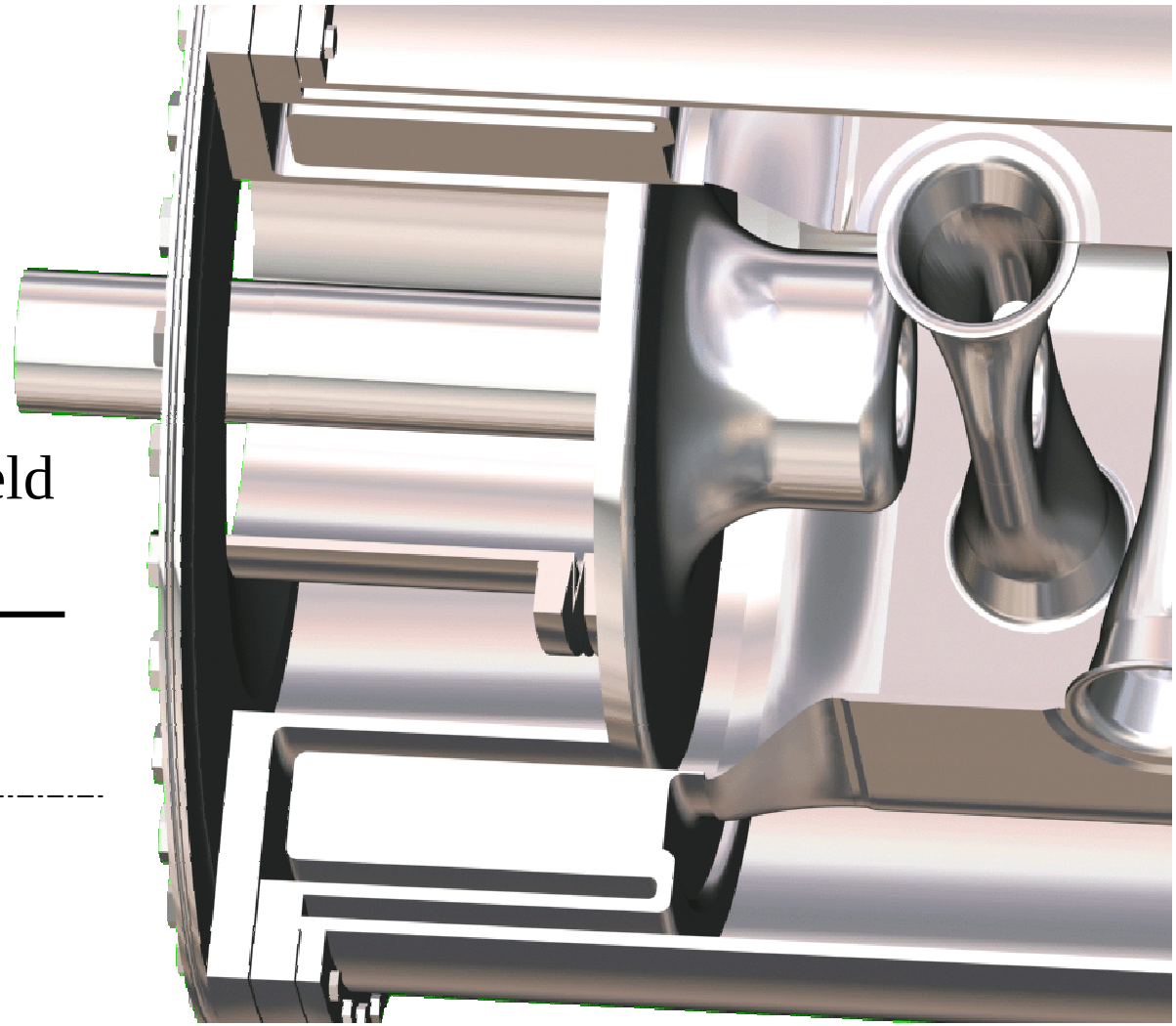

SC 4-GAP H-CAVITY (700 MHz , β=0.2)
dismountable tuning plate joint – e/m fields

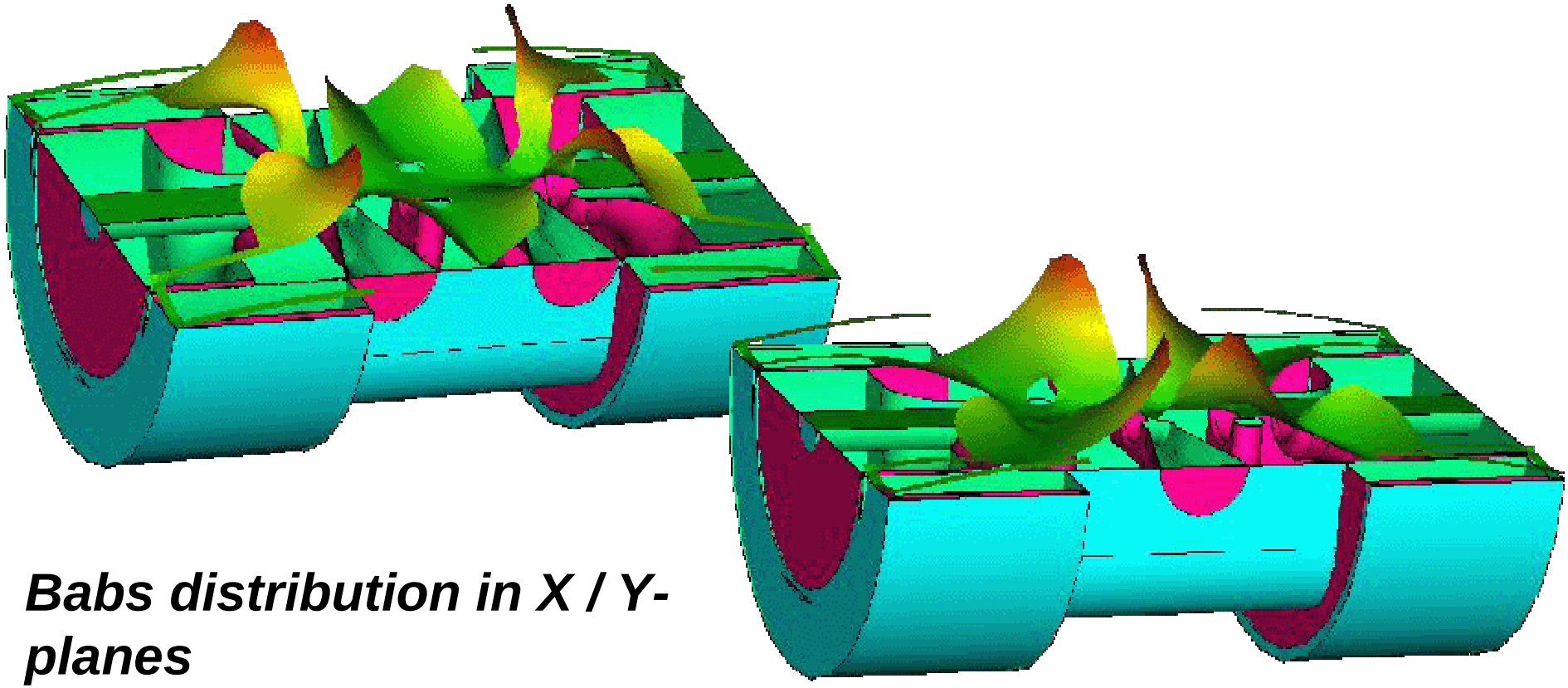

Babs distribution in X / Y-planes

SC 4-GAP H-CAVITY (700 MHz , β=0.2)
dismountable tuning plate joint – magnetic field

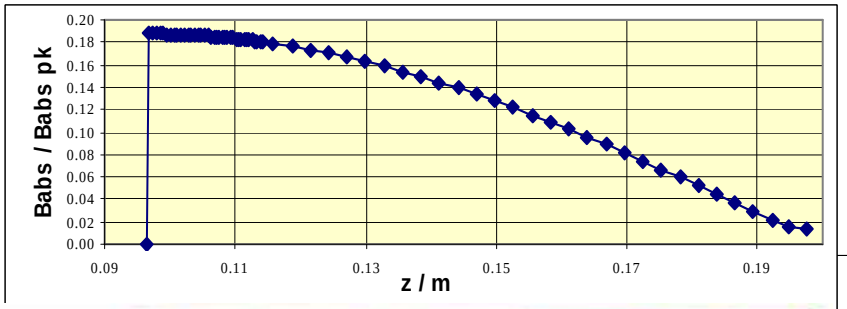

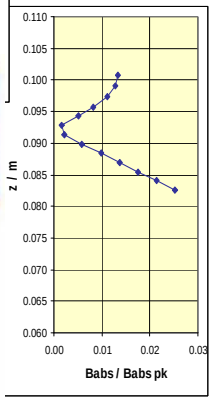

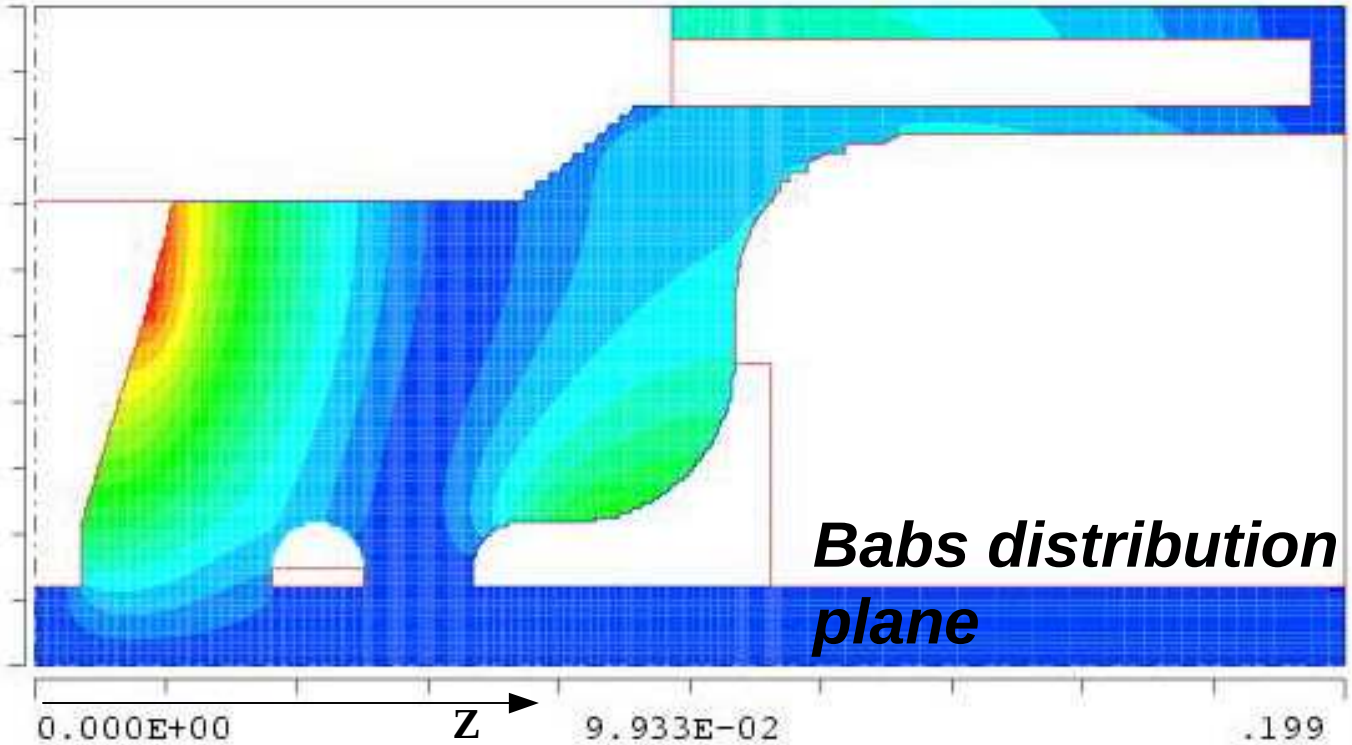

Babs distribution in X - plane

SC 4-GAP H-CAVITY (700 MHz , β=0.2)
dismountable tuning plate joint – magnetic field

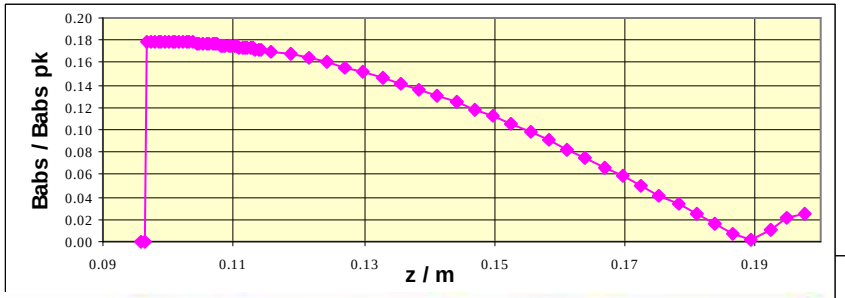

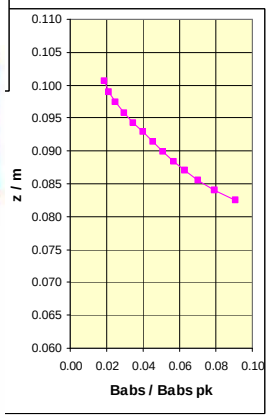

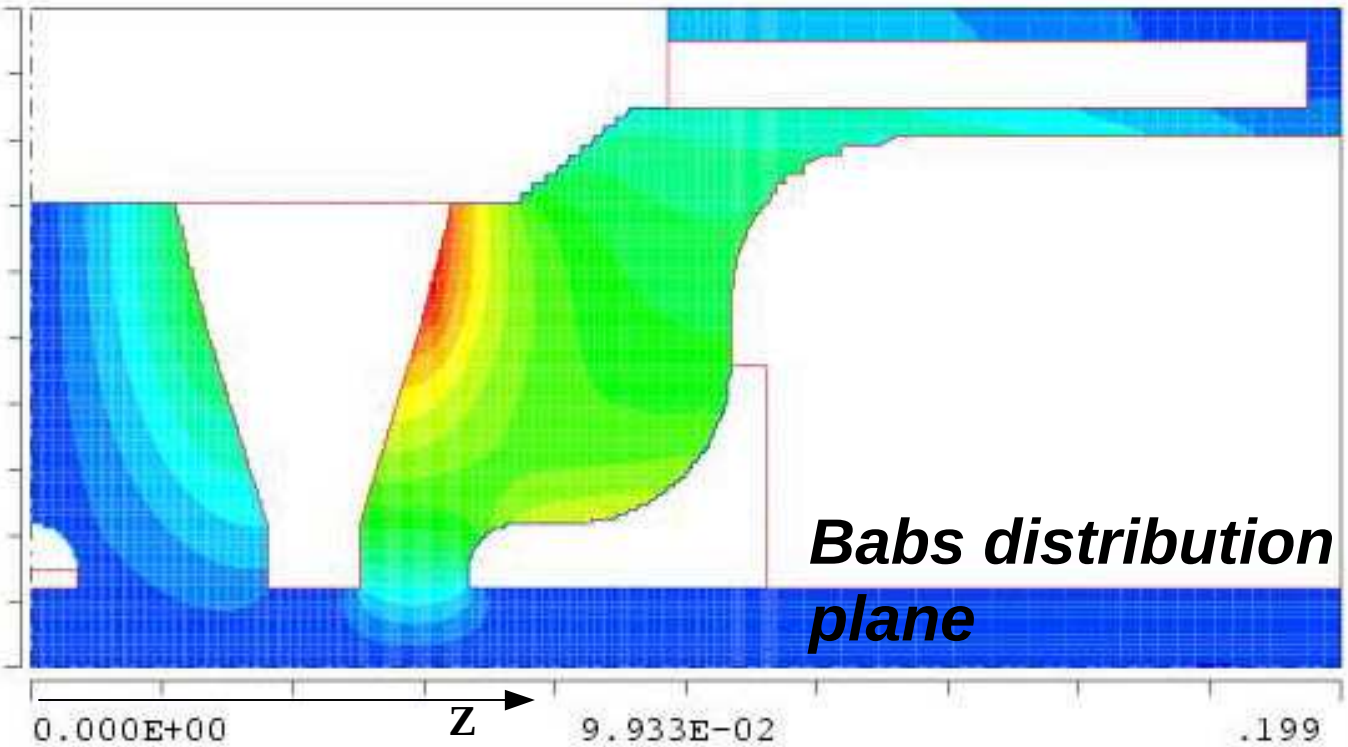

Babs distribution in Y - plane

SC 4-GAP H-CAVITY MODEL (700 MHz , β=0.2)
dismountable tuning plate joint

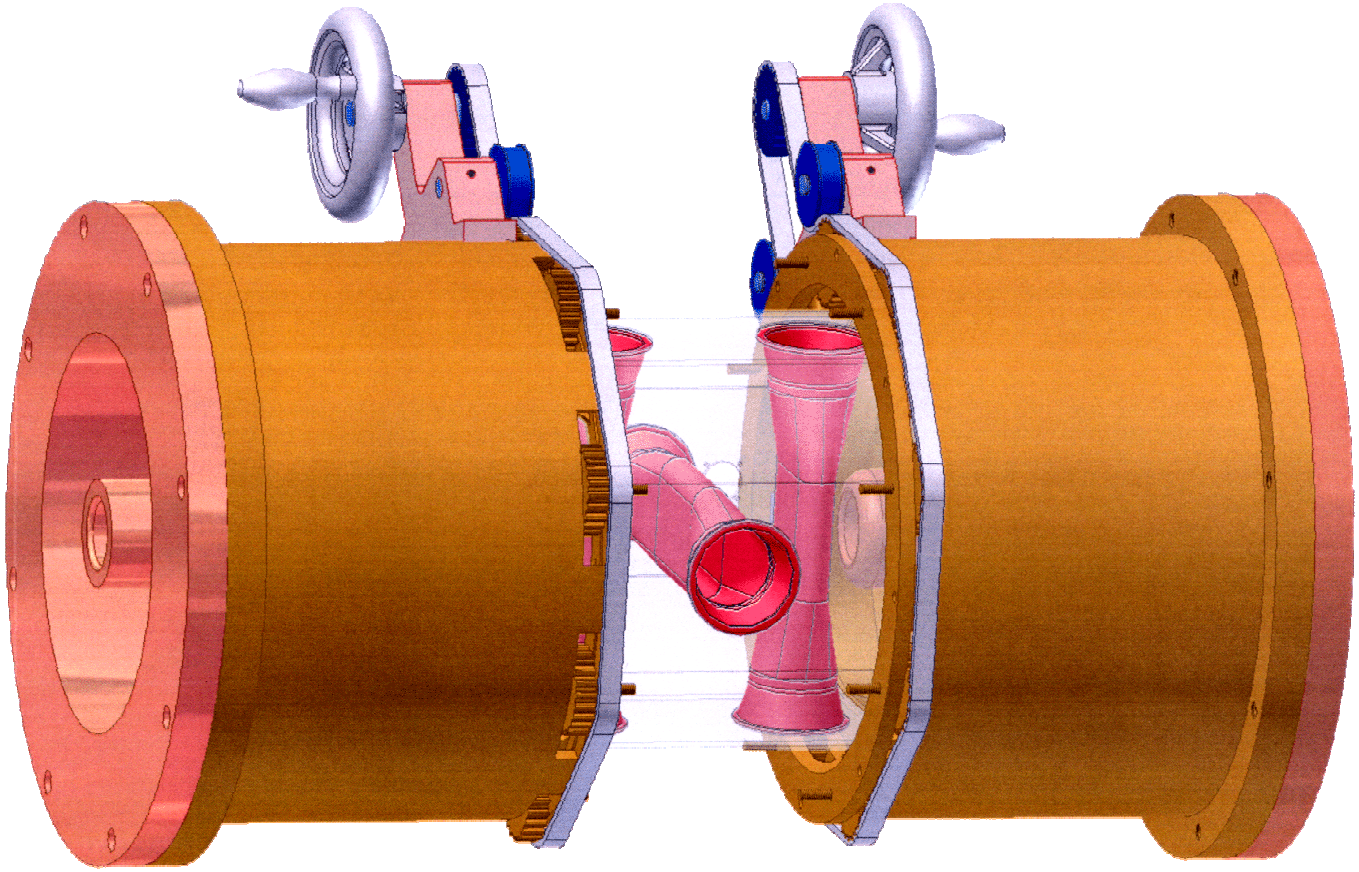
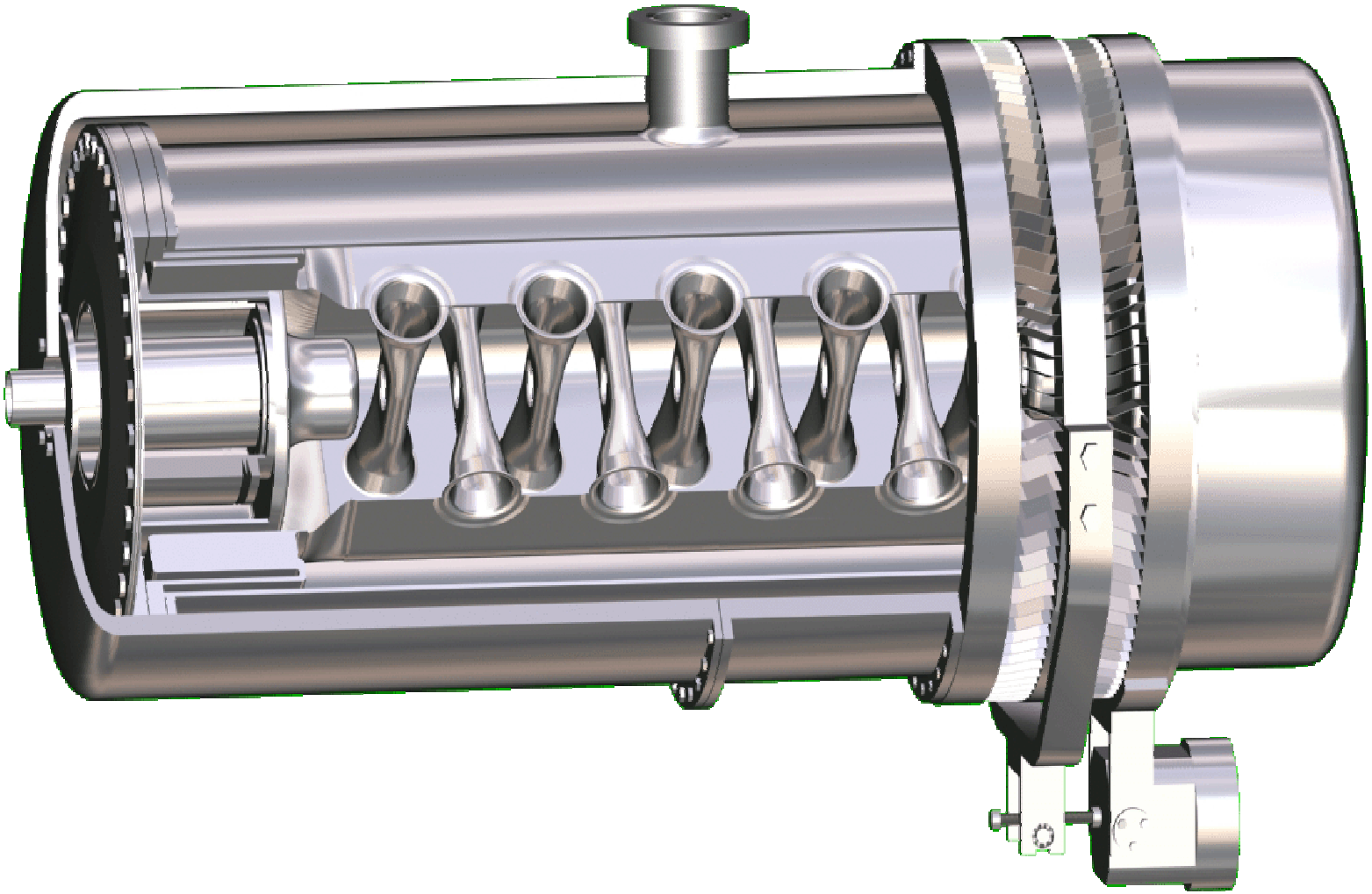
SC 10-GAP H-CAVITY (700 MHz , β=0.2) in cryomodule with DESY/INFN tuner